AECOM
250 Apollo Drive
Chelmsford, MA 01824
aecom.com

Project name:
Lawrence Brook Watershed Assessment

Project ref:

To:
Brendan Callahan
Assistant Director of Planning
Department of Community
Development & Planning
City Hall
Peabody, MA 01960

From:
Jennifer Doyle-Breen

Date:
May 15, 2018

CC:
Larry Soucie
Iulia Barbu
Steve Eisenlord

Memo

Subject: Lawrence Brook Watershed Assessment Task 3: Conceptual Design

1.0 INTRODUCTION

The purpose of the Lawrence Brook Watershed Assessment Project is to evaluate alternatives, including Low Impact Development (LID) and Green Infrastructure (GI) approaches, to mitigate flooding and improve stormwater quality in the watershed. The watershed is tributary to the North River on the eastern side, just downstream of Peabody Square and upstream of the Salem border. The watershed boundary and stormwater infrastructure features were evaluated during Task 1 of the project, and are described in the Task 1 final memorandum. The Lawrence Brook watershed is defined as the area tributary to the stormwater outfall discharging to the North River behind 45 Walnut Street (Century Tire). Task 2 work included identifying potential Best Management Practices (BMPs) that could be implemented for flood mitigation and water quality improvement in the watershed and modelling these in various combinations to estimate flood mitigation benefits. As part of the Task 2 evaluations, an option of installing a new stormwater outfall to the North River was identified, and preliminary modelling estimated that the new outfall could provide flood mitigation benefits at 45 Walnut Street and surrounding roadways.

This memo summarizes the results of Task 3, which included additional modelling to analyze the new stormwater outfall alignment in greater detail in order to optimize the pipe size and configuration to convey flood flow to the North River. This memo also summarizes conceptual design of the new stormwater outfall and the BMPs evaluated during Task 2, as well as anticipated construction costs and permitting requirements.

2.0 MODELLING

2.1 METHODOLOGY

The location of the new drain evaluated as part of Task 2 is shown in Figure 2-1. To further evaluate the optimal configuration for the outfall route, two alternative alignments were identified, as described below.

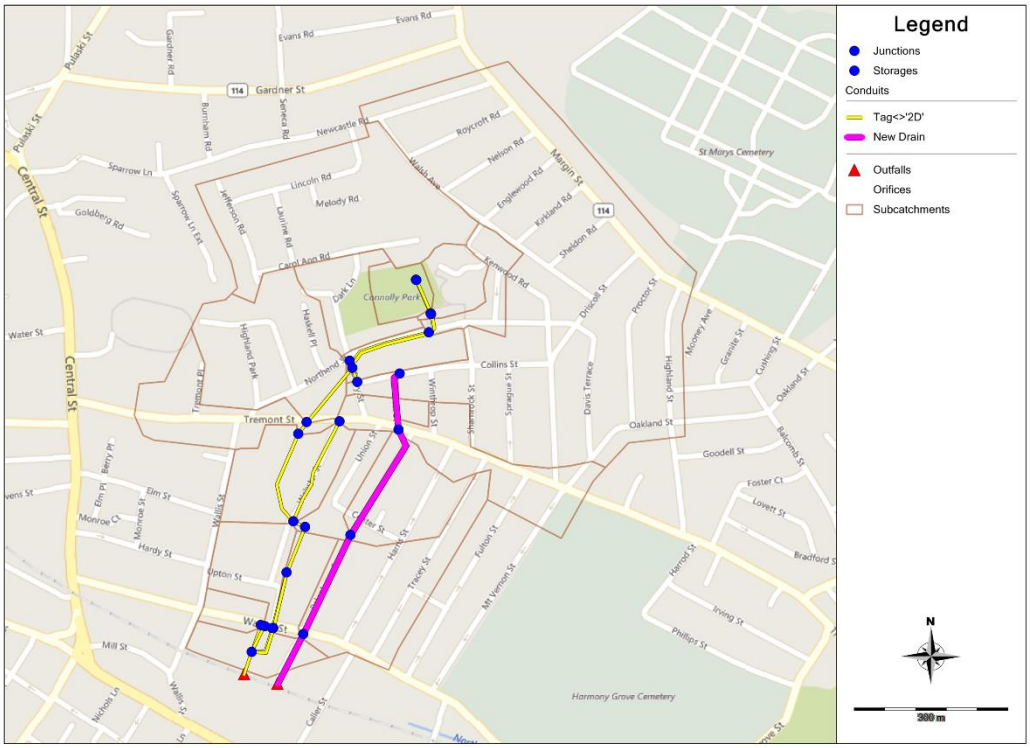

Figure 2-1: New Drain Alternative Evaluated in Task 2

- **Alternative 1**. This alternative alignment consists of interconnecting the existing drain system at Walnut Street with the new drain proposed along Paleologos Street. The interconnection would include a flap valve so that stormwater near the intersection of Walnut Street and Upton Streets would only flow east toward the new outfall if there was capacity in the new drain; stormwater would not flow from the new drain to the west toward the center of current flooding concerns at the Walnut/Upton Street intersection.

- **Alternative 2**. Alternative alignment 2 involves eliminating the upstream portion of the new drain on Paleologos Street and interconnecting the new storm drain with the existing storm drain on Walnut Street. This would result in a shorter stormwater pipe length and could result in lower cost. Two versions of Alternative 2 were considered. Optimization 2a includes the new drain with flap gate on Walnut Street and the lower portion of the new drain on Paleologos Street (from Walnut Street to new outfall at the North River). Optimization 2b is the same as 2a but also includes installing a larger pipe on Upton Street.

In order to optimize the outfall alignment for maximum flood mitigation benefit, Alternatives 1, 2a and 2b were evaluated using the Lawrence Brook model created during Task 2, and the results were discussed with the City. As detailed in the December 19, 2018 Task 2 memorandum, a coarse sub-model of the Lawrence Brook watershed was developed based on the field investigation and available GIS data collection completed as part of Task 1, and detailed in the July 31, 2017 Task 1 Memorandum. The PCSWMM software was used for the modeling, which is distributed by Computational Hydraulics International (CHI) and is a graphical user interface for the USEPA SWMM5 modeling software. The model

allows the water depths and areal extent of the flooding to be estimated. This information was developed for the optimization alternatives, and then shared with the City to reach consensus on the alternative that achieved the best flood mitigation benefit. After the optimal configuration was selected based on the modelling results and in consultation with the City, the sub-model was run again with the selected optimized alignment, BMPs and underground storage identified as part of Task 2.

The Task 2 evaluations utilized the 2-year, 6-hour and 10-year, 6-hour storms. Based on information subsequently provided to the City regarding conditions under which flooding occurs, the flooding may be due to intense storms with shorter durations. Based on discussion with the City, it was agreed that Task 3 optimization evaluations would utilize Atlas 14 one-year and two-year return interval storm events of 60-minute durations to more closely represent observed flooding conditions. The rainfall was distributed over 60 minutes using the Huff 2nd Quartile distribution. Table 2-1 is a summary of the one-year, 60-minute and two-year, 60-minute design storm characteristics. Figures 2-2 and 2-3 show the design storm hyetographs.

Table 2-1. Design Storm Characteristics Used for Task 3

Design Storm	Total Depth (inches)[1]	Peak 15-minute Intensity (in/hr)[2]
1-year, 60-minute	0.874	1.993
2-year, 60-minute	1.07	2.44

1. Based on Atlas 14 for Peabody
2. Based on 2nd Quartile Huff Distribution

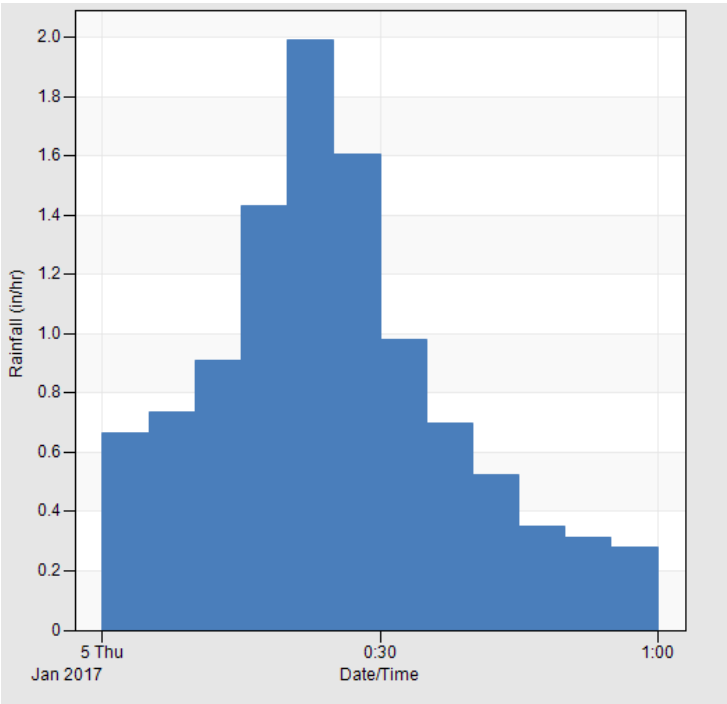

Figure 2-2. Hyetograph of One-Year, 60-minute Design Storm

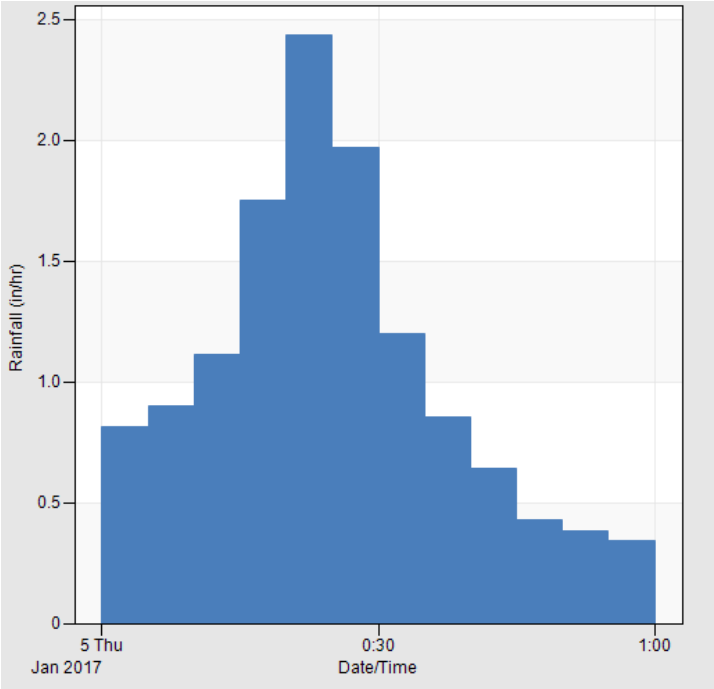

Figure 2-3. Hyetograph of Two-Year, 60-minute Design Storm

In addition to the Lawrence Brook watershed model developed as part of Task 2, AECOM previously developed a SWMM model of the overall North River watershed as part of the Downtown Peabody Project 1 Design process. The model is described in the April 30, 2010 MEPA Notice of Project Change (NPC) for the Downtown Peabody Flood Mitigation Project, and was subsequently refined during design of Project 1. Following the sub-model assessments of the alternative outfall optimizations, BMPs and upstream storage, the selected optimization, BMPs, and underground storage were evaluated in the more detailed North River basin-wide SWMM model in order to assess how the proposed improvements function as part of larger watershed. This modelling approach was used so that the Lawrence Brook watershed could be isolated for the purposes of more clearly assessing the alternative alignments, BMPs, and underground storage. The sub-model also increased the efficiency of the analysis since the full model takes longer to run.

2.2 RESULTS

The results of the modelling analysis are described in this section. Section 2.2.1 summarizes the Existing Conditions, and Sections 2.2.2 through 2.2.4 summarize the optimization alternatives and results with BMPs and underground storage. Results are displayed in figures that illustrate the extent of flooding, with red indicating areas of greatest flood depth, and blue indicating less depth of flooding. The full North River basin-wide SWMM model results are summarized in Section 2.2.5

2.2.1 Baseline Conditions. The baseline conditions represent the existing condition of the watershed and are used to provide a basis for comparison with the alternatives. The sub-watershed model was run for the design storms identified in Table 2-1. Table 2-2 summarizes the total flooding area and the peak depth at 45 Walnut Street near Century Tire, which is the center of the area where flooding is typically observed, based on information provided by the City. Figures 2-4 and 2-5 illustrate the inundation areas predicted by the model for the 2-year, and 10-year storms, respectively.

Table 2-2: Model Results for Existing Conditions

Design Storm	Estimated Peak Flood Depth (Feet)[1]	Estimated Total Area Flooded (acres)
1-year, 60-minutes	1.50	1.51
2-year, 60-minutes	1.68	2.13

1. Peak Depth at Walnut Street at Century Tire/45 Walnut Street

Figure 2-4 Estimated Flooding for Existing Conditions for 1-year, 60-minute Design Storm

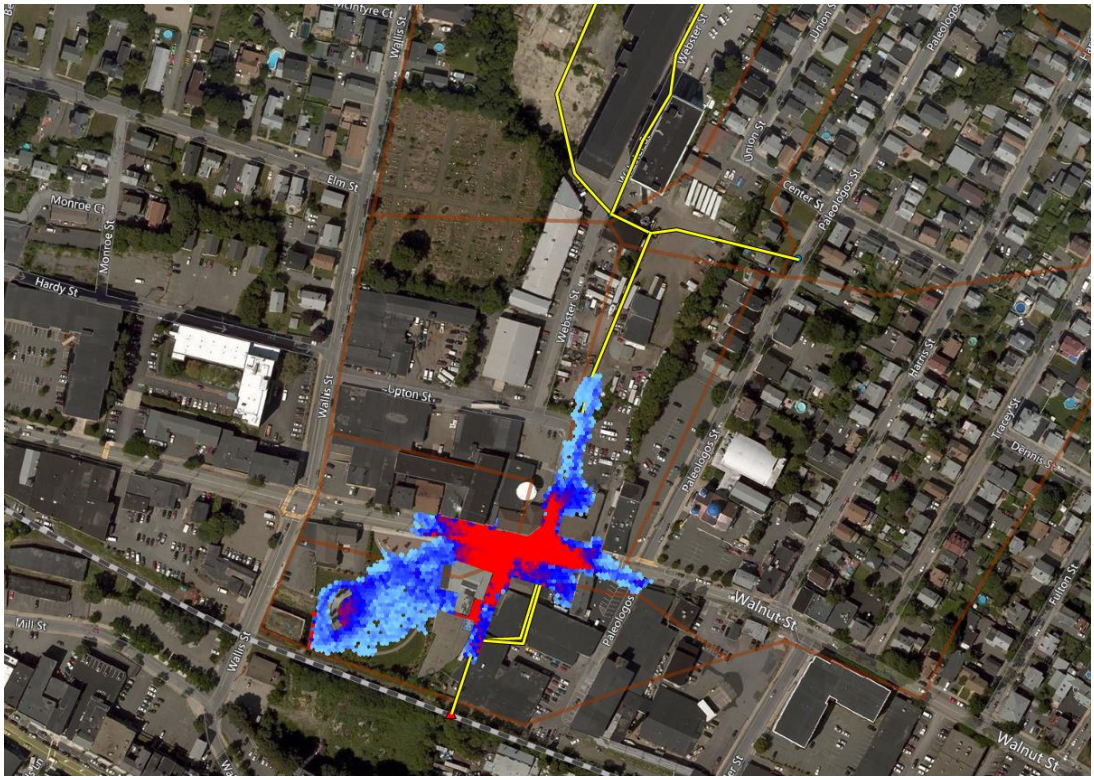

Figure 2-5 Estimated Flooding for Existing Conditions for 2-year, 60-minute Design Storm

2.2.2 Optimization 1. Optimization 1 consists of interconnecting the existing drain system at Walnut Street with the new drain proposed along Paleologos Street. Table 2-3 provides a summary of the model results for Optimization 1, while Figure 2-6 shows the conceptual layout for Optimization 1 and the inundation results for the 2-year, 60 minute storm. The model results estimate that the flooding is eliminated for the 1-year, 60-minute design storm.

Table 2-3: Model Results for Optimization 1

Design Storm	Estimated Peak Flood Depth (Feet)[1]	Estimated Total Area Flooded (acres)
1-year, 60-minutes	0.0	0
2-year, 60-minutes	0.48	0.13

1. Peak Depth at Walnut Street at Century Tire/45 Walnut Street

2.2.3 Optimization 2. Alternative 2 includes a 2-foot by 4-foot box culvert along Walnut Street and a 3-foot by 5-foot box culvert along Paleologos Street from Walnut Street to a new outfall at the North River. Two versions of Optimization 2 were considered. Optimization 2a includes the new drain with flap gate on Walnut Street and the lower portion of the new drain on Paleologos Street (from Walnut Street to new outfall at the North River). Optimization 2b is the same as 2a but also includes a 2-foot by 4-foot box culvert on Upton Street. The model results estimate that adding the 2-foot by 4-foot box culvert optimization on Upton Street decreases the areal extent of the flooding, but increases the flood depth at 45 Walnut Street. This likely occurs because the box culvert on Upton Street as part of Optimization 2b moves the flow downstream quicker, and thus increases the flood depth compared to Optimization 2a. Table 2-4 is a summary of the model results, and Figures 2-7 and 2-8 show the estimated inundation for the two alternatives. Based on discussion of these results with the City, it was agreed that Optimization 2a offered the maximum flood mitigation benefit of the alternatives evaluated, and therefore Optimization 2a was selected for additional model runs with BMPs, storage, and the full North River watershed-wide SWMM model.

Table 2-4. Model Results for Optimization 2

Optimization	Design Storm	Estimated Peak Flood Depth (Feet)[1]	Estimated Total Area Flooded (acres)
Optimization 2A: New Drain Along Walnut Street to Paleologos Street and New Drain from Paleologos Street to Outfall	1-year, 60-minutes	0	0
	2-year, 60-minutes	0.81	0.59
Optimization 2b: New Drain Along Walnut Street to Paleologos Street, New Drain from Paleologos Street to Outfall, and Upsizing Pipes on Upton Street	1-year, 60-minutes	0	0
	2-year, 60-minutes	0.89	0.41

1. Peak Depth at 45 Walnut Street/ Century Tire

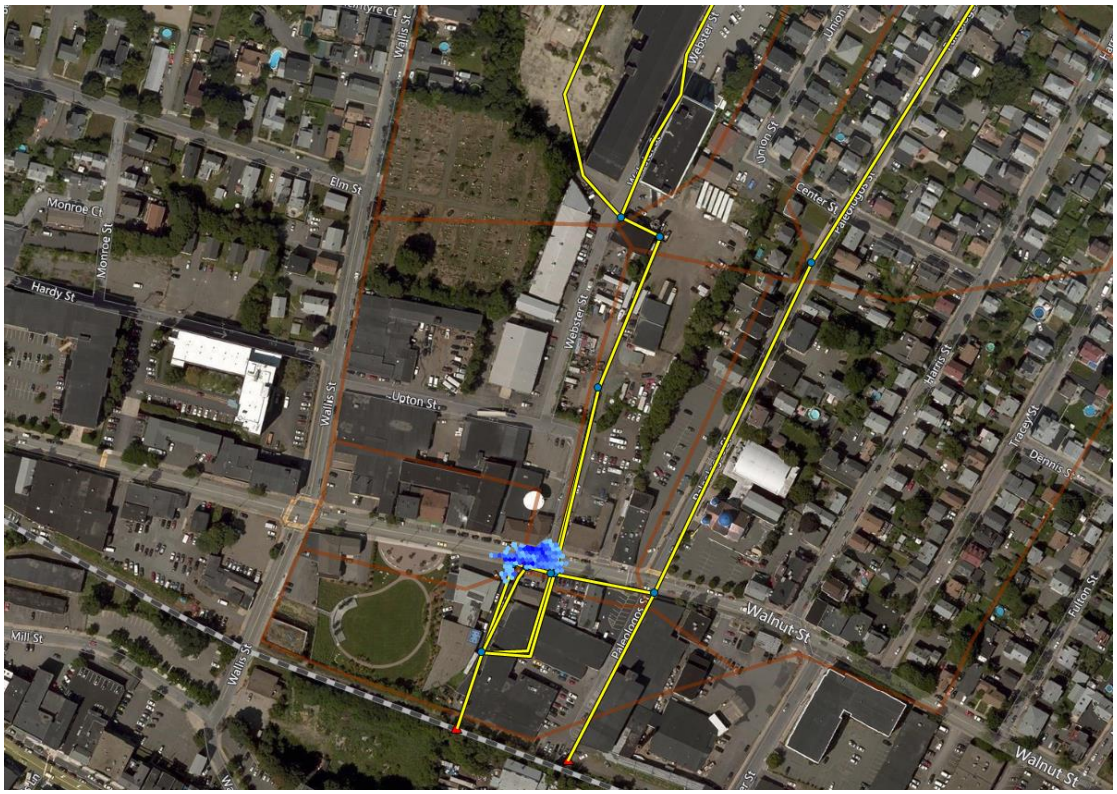

Figure 2-6 Estimated Flooding for Optimization 1 for 2-year, 60-minute Design Storm

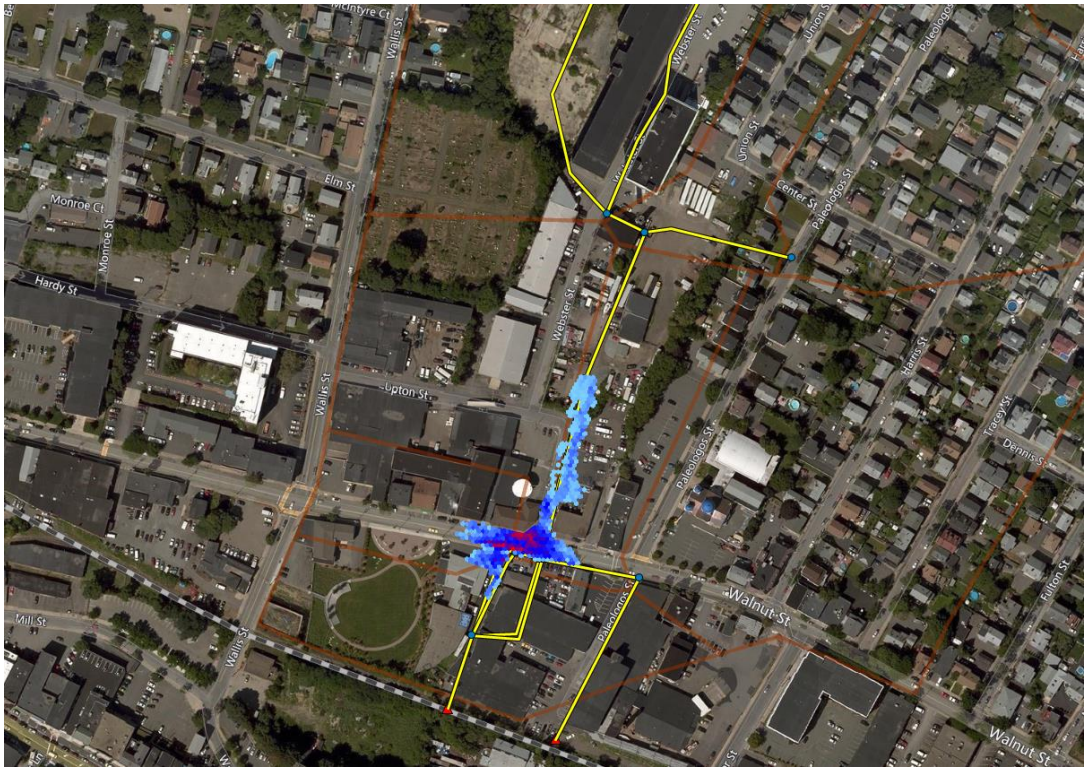

Figure 2-7 Estimated Flooding for Optimization 2a for 2-year, 60-minute Design Storm

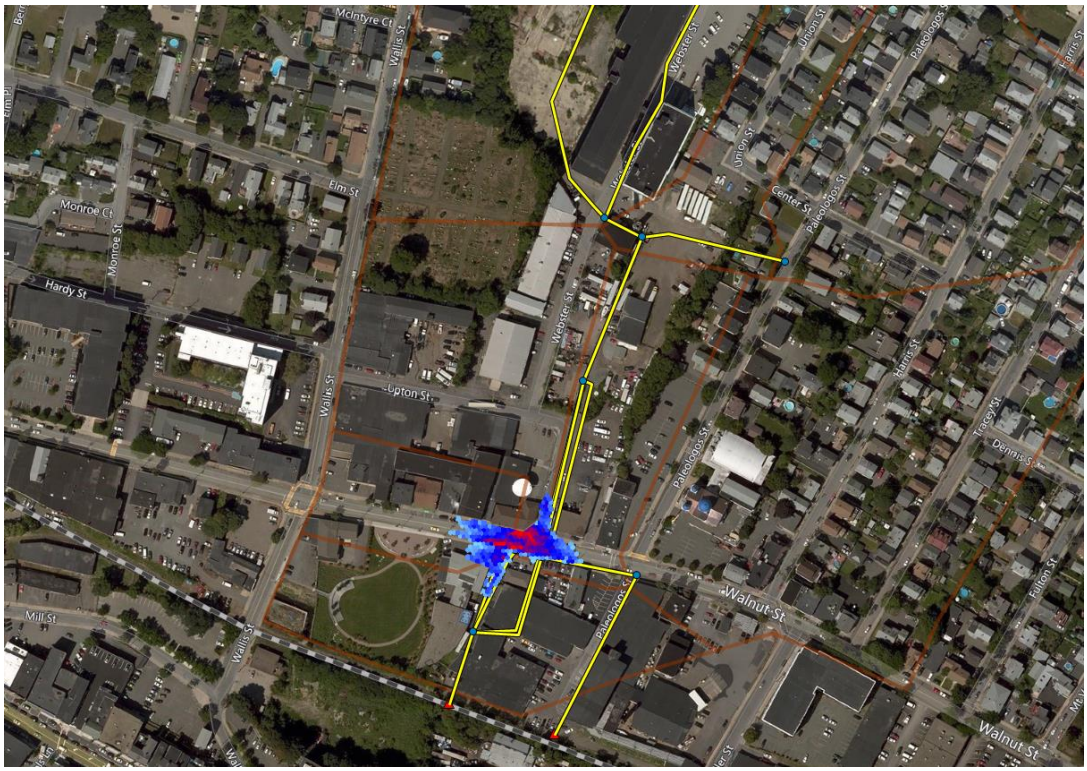

Figure 2-8 Estimated Flooding for Optimization 2b for 2-year, 60-minute Design Storm

2.2.4 Optimization 2a with BMPs and Upstream Storage. Optimization 2a was analyzed further by including BMPs and upstream storage described in Section 2 of the Task 2 Memorandum. BMPs/LID that were assessed consisted of the following, which are further described in the Task 2 Memorandum:

- Bioretention basin at Melody Road Cul –de-Sac
- Bioretention basin at former Carol Ann Road Cul-de-Sac
- Pervious pavement at Peabody Housing Authority
- Four tree boxes along Carol Ann Road/Connolly Terrace
- Tree trenches along Margin, Tremont, and Walnut Streets
- Connolly Park underground storage

The results estimate that flooding is eliminated for the one-year, 60-minute storm and that flooding extent and depth is reduced relative to Optimization 2a results without the BMPs and upstream storage. These results are summarized in Table 2-6. Figure 2-9 shows the estimated inundation for the two-year, 60-minute design storm.

Table 2-6. Model Results for Optimization 2a with BMPs and Upstream Storage

Design Storm	Estimated Peak Flood Depth (Feet)[1]	Estimated Total Area Flooded (acres)
1-year, 60-minutes	0	0
2-year, 60-minutes	0.51	0.15

1 Peak Depth at 45 Walnut Street/Century Tire

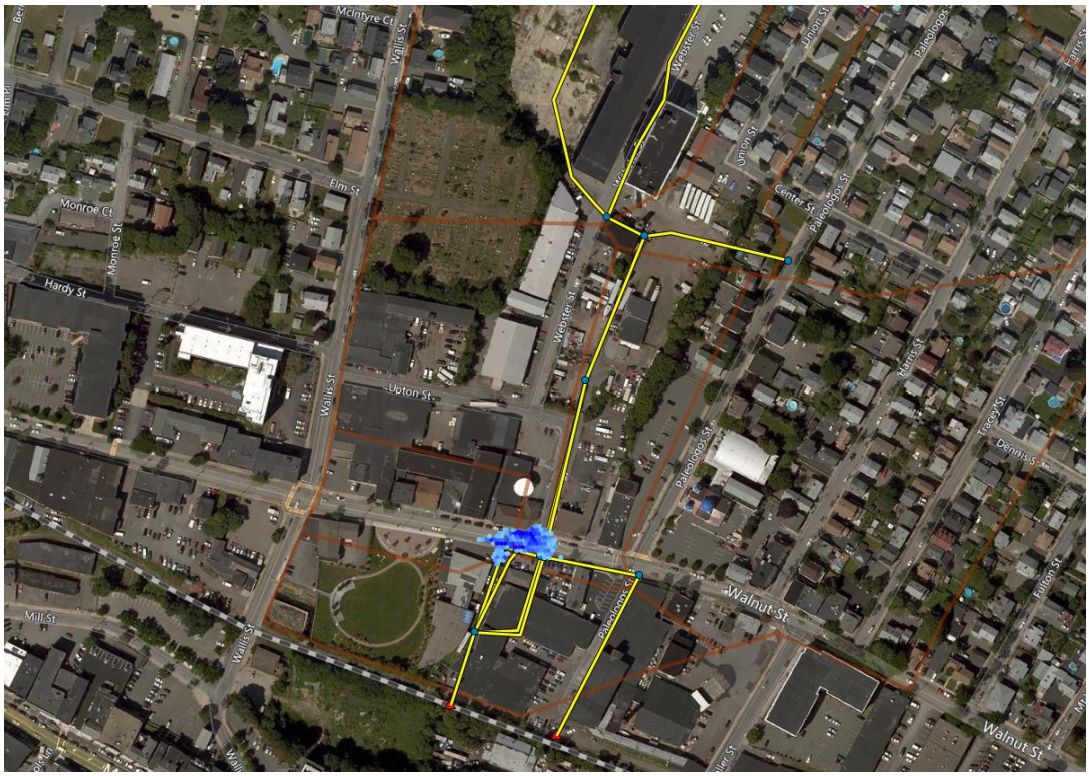

Figure 2-9 Estimated Flooding for Optimization 2b with BMPs and Upstream Storage for 2-year, 60-minute Design Storm

2.2.5 North River Full Watershed Model. Optimization 2a with BMPs and upstream storage was selected for further analysis with the watershed-wide SWMM model. The full watershed model run for the one-year, 60-minute and two-year 60-minute design storms for both existing conditions and with Optimization 2a with BMPs and upstream Storage, under both high and low tide conditions. Figure 2-10 illustrates the full watershed model with the Lawrence Brook area highlighted in magenta. Table 2-7 is a summary of the results.

In general, the simulated water levels for existing conditions with the full model decreased for existing conditions compared to the sub-model (compare Table 2-2 and 2-7). The sub-model assumed a “normal” boundary condition, which means that the outfall stage is based on normal flow depth in the connecting conduit. However, the results indicate that the simulated Hydraulic Grade Line (HGL) in the outfall pipes in the full model are steeper than the slope of the pipes, and therefore the existing outfall could accept more flow once the normal boundary condition was replaced with the full model. The simulated flooding for the proposed condition with the full model was much closer to the proposed conditions in the sub-model. For example, the sub-model had estimated a peak flood depth of 0.51 feet and a total flood area of 0.15 acres, while the full model estimates a peak depth of 0.49 feet for high tide and 0.50 feet for low tide, and a total flood inundation of 0.16 acres. Essentially, these are same results. The full model analysis estimates that the proposed Optimization 2a drain with BMPs and upstream storage will have the same benefits when analyzed as part of the larger watershed.

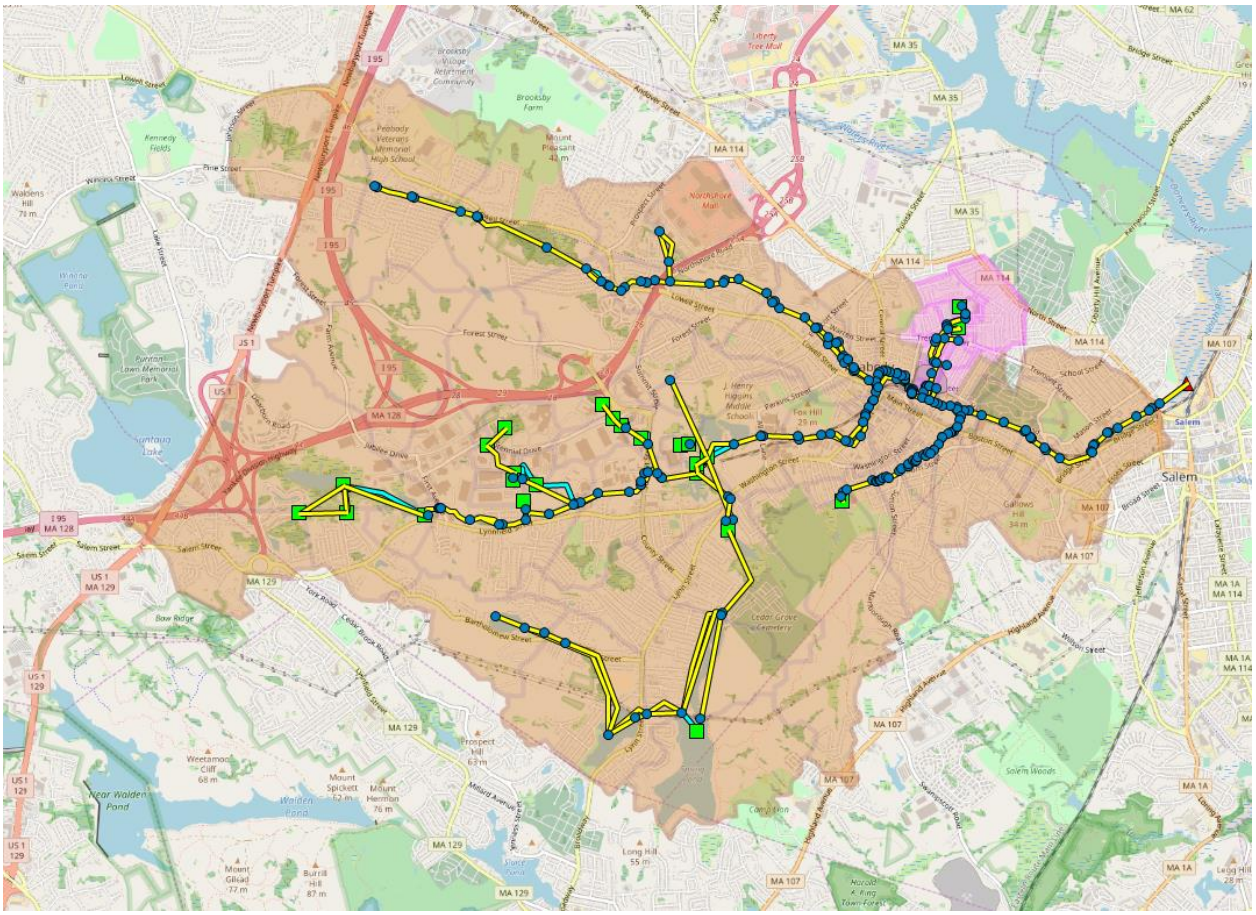

Figure 2-10. Full North River Watershed SWMM Model with Lawrence Brook Refinements

Table 2-7. Analysis of Optimization 2a with BMPs and Upstream Storage Using Full Watershed Model

Scenario	Design Storm	Estimated Peak Flood Depth (Feet)[1]	Estimated Total Area Flooded (acres)
Existing Conditions - Full Model - High Tide	1-year, 60-minutes	1.17	0.67
	2-year, 60-minutes	1.57	1.84
New Outfall: Optimization 2a with BMPs and Storage - Full Model - High Tide	1-year, 60-minutes	0	0
	2-year, 60-minutes	0.49	0.16
Existing Conditions - Full Model - Low Tide	1-year, 60-minutes	1.17	0.67
	2-year, 60-minutes	1.57	1.84
New Outfall: Optimization 2a with BMPs and Storage - Full Model Low Tide	1-year, 60-minutes	0	0
	2-year, 60-minutes	0.50	0.16

1. Peak Depth at 45 Walnut Street/ Century Tire

3.0 OUTFALL AND BMP/LID CONCEPTUAL DESIGN AND COST ESTIMATE

A conceptual design of an additional outfall in the area of Paleologos Street was developed by AECOM. The purpose of the additional outfall was to improve flood conditions on Walnut Street by providing a secondary path for water to reach the North River. The concept is to install approximately 200 linear feet of 2-foot by 4-foot drain culverts along Walnut Street and approximately 380 linear feet of 3-foot by 5-foot drain culvert along Paleologos Street. Box culverts are proposed due to the limited elevation difference from Walnut Street (El. 12.5 – 13.5) to the outfall at North River (El. 7.2). The box culverts provide a high flow capacity with a reduced vertical profile compared to a circular pipe.

A plan and profile of the proposed outfall are provided in Attachment A, as well as sample detail sheets. The sample detail sheets were created by American Concrete Industries for a similar project they completed in Bangor Maine. These details show a typical culvert, drainage vault, and outfall section. The final page is a standard section of a 2-foot by 4-foot culvert, which is a slightly different design due to the smaller size. Attachment A also includes conceptual profiles of the bioretention basins, porous pavement and tree box filters. The layout of the bioretention basins will be determined during final design, based on consultation with the City and consideration of issues such as access for emergency vehicles.

There are two areas of concern with the proposed outfall. First is the limited elevation available to work within. In many areas, the cover over the proposed culvert is minimal, with as little as 16 inches in some locations. The limited room provides very little flexibility to avoid existing utilities and may impact the roadway profile in Walnut Street. The second area of concern is the outfall. The outfall will be constructed through an existing granite block wall that is adjacent to an active railroad track. Typically in order to install a culvert underneath a rail road, jacking will be required. However due to the close proximity to the railroad to the granite block wall, and unknowns about the depth and thickness of the granite block wall, we are unable to determine if jacking will be feasible at this time. For the purposes of the construction cost estimate, it has been assumed that the culvert will be installed via jacking; however the feasibility of this approach would be determined during final design. Alternatively, the culvert could be installed by open trench construction if use of the railroad can be suspended for an extended period of time.

In order to determine how to construct the outfall, the existing site will need to be studied further. Geotechnical evaluations should be conducted to confirm details of how the granite wall was installed. In addition, the project should be discussed with the railroad owner to determine their requirements related to jacking as well as determining if a temporary shutdown of services for the construction could be agreed upon. The ideal scenario would be to shut down the railroad and use an open trench construction method to avoid complications associated with jacking. If the track is taken out of service for any length of time, the City could be responsible for providing delivery services to the affected customers during the down time (at the City's cost).

The attached conceptual plan and profile and the cost estimate have been based on the following assumptions:

- The work in Walnut Street may require utility relocation. The cost estimate has assumed that 200 linear feet of gas main will need to be relocated. Additional utilities may need to be relocated as determined from the survey to be performed during design.
- Traffic on Walnut Street will need to be diverted for the portion of the work on Walnut Street. An allowance has been included for police details.
- Proposed utility locations, inverts and slopes will be adjusted based on new survey conducted as part of a final design. It is worth mentioning that the available information shows that the outfall is feasible, but the depths are very tight. The survey should include existing utilities in Walnut Street, the existing 4-foot by 6-foot outfall and elevations within the river channel.

- No costs have been carried for rock, unsuitable material, or hazardous material. Borings and soil samples should be taken as part of final design to check for the presence of these items.
- This design relies on the cooperation of the railroad property owner. Past experience working with state owned railroad properties shows that permitting around the railroad can significantly impact project schedule. The railroad is owned by the Massachusetts Bay Transportation Authority (MBTA). Springfield Terminal Railway operates and maintains the tracks and has a deeded right to use the tracks. The parent company of Springfield Terminal Railway is Pan-Am Railways.
- Additional information is required on the road profile of Walnut Street. Paving was assumed to be 4 inches thick for the cost estimate, and the depth of the paving and subbase may be impacted by the shallow depth of cover over the culvert.
- A flap valve at the discharge point to the river was not included in this concept design. A flap valve or tide gate may be beneficial to prevent water from the river from backing into the drainage system. However a flap valve can also cause significant head loss in the structures, hampering the ability of the water to get through the system. More modeling should be conducted during final design to determine if a flap valve will be beneficial.
- Work to construct the outfall will require bypassing the North River. A porta dam or similar device may need to be installed for the portion of the work involving penetrating the existing granite block and jacking a section of culvert underneath the railroad. Alternative construction materials for the outfall, such as a corrugated metal archway should be considered as part of a final design. Work should be conducted during typically drier months of June through September to minimize potential impacts of by-passing a section of the North River.
- No railroad fees (RR liability insurance, cost of flagmen, permit fees, etc.) are included in the opinion of probably costs in Table 3-1, and no costs for railroad shutdown are included.
- No hazardous materials are present.

Table 3-1 provides a cost summary for the proposed work. Conceptual capital costs were developed using 2nd quarter 2018 dollars and include 22% contractor overhead and profit, and estimate contingency. The estimate contingency is based on the level of design completed and covers items and systems that were not fully developed during conceptual layout and design. No escalation is included for the midpoint of construction.

The estimated construction cost for constructing the Paleologos Street Outfall is $1,095,000. The pricing does not include rock excavation, unsuitable materials, hazardous material disposal, or potential railroad fees. The estimate also assumes that the method of construction for crossing under the railroad will be jacking.

The estimated construction cost for constructing the underground storage in Connelly Park is $609,000. This cost includes placing the storage units underneath Connelly Park, connecting to existing storage, and reseeding the area after construction.

The estimated construction costs for the treebox filers, porous pavement, and bioretention basin are shown in Table 3-1. These include demolition of existing pavement/structures, connections to existing adjacent drainage infrastructure, and restoration of existing conditions.

.

Table 3-1. Opinion of Probable Construction Cost

Paleologos Street Outfall	
Construction Cost	$ 782,000
Estimating Contingency (40%)	$ 313,000
Subtotal	$ 1,095,000
Connelly Park Underground Storage	
Construction Cost	$ 428,000
Estimating Contingency (30%)	$ 129,000
Subtotal	$ 557,000
Treebox Filters	
construction Cost	$ 65,000
Estimating Contingency (30%)	$ 20,000
subtotal	$ 85,000
Porous Pavement	
Construction Cost	$ 157,000
Estimating Contingency (30%)	$ 47,000
subtotal	$ 204,000
Bioretention Basin	
construction Cost	$ 67,000
Estimating Contingency (30%)	$ 20,000
subtotal	$ 87,000
Total Construction Cost	**$ 2,030,000**
Engineering and Owners Contingency (45%)	$ 910,000.00
Total	**$ 2,940,000.00**

4.0 PERMITTING

Portions of the new stormwater drain and outfall would be located in a Land Under Water (LUW), Bank, Riverfront Area, and Bordering Land Subject to Flooding (BLSF) associated with the North River, which are resource areas subject to jurisdiction by MassDEP and the Peabody Conservation Commission under the Massachusetts Wetlands Protection Act (WPA) regulations (310 CMR 10.00) and Peabody Wetlands and River Protection Ordinance. Thus, construction of the project will require filing a Notice of Intent with the Peabody Conservation Commission and MassDEP in order to obtain an Order of Conditions authorizing the project. It is expected that the work to connect the new storm drain to the North River at the new discharge outfall will result in disturbance to LUW and Bank, but that any impacts could be limited to less than 50 feet of Bank and/or 5,000 square feet of LUW, and therefore would be in conformance with the General Performance Standards for these resource areas. Similarly, impacts within Riverfront and BLSF would be temporary in nature, and are therefore also anticipated to be in conformance with General Performance Standards for these resource areas. Therefore, it is not anticipated that a WPA Variance from MassDEP would be needed for the project.

The US Army Corps of Engineers has jurisdiction over the North River under the federal Clean Water Act. Based on a review of the April 2018 Corps of Engineers General Permits (GP) for Massachusetts, it is expected that the project would qualify under either General Permit (GP) 9, Utility Line Activities, and/or GP 14, Temporary Construction, Access and Dewatering. Based on conceptual project information available, it appears that the project can meet all of the General Conditions associated with the GPs, however, this assumption will be confirmed during the design process. It is assumed that an Individual Permit would not be required.

The North River is also under the jurisdiction of the MassDEP 401 Water Quality Certification regulations (310 CMR 4.00); however, work in the river for temporary dewatering and/or rip-rap fill (if needed to address scour issues) is anticipated to affect less than 5,000 square feet of wetland resource area, and therefore would not require an Individual Water Quality Certification.

Based on MassGIS available on-line Oliver mapping tools, all portions of the project area are located outside of NHESP protected habitat, Chapter 91 jurisdiction, and Areas of Critical Environmental Concern (ACEC).

Projects requiring permits issued by Commonwealth Agencies or Departments and exceeding certain thresholds require filing an Environmental Notification Form (ENF) and/or Environmental Impact Report (EIR) with the EOEE Massachusetts Environmental Policy Act (MEPA) office. The North River has a FEMA designated floodway, which is one of the triggers for ENF submittal. However, because no Commonwealth Permits are anticipated to be required, it is not expected that an ENF submittal will be needed. Furthermore, it is assumed that the project would not change the FEMA 100-Year Base Flood Elevation, and therefore would not trigger the need for a Conditional Letter of Map Revision (CLOMR) or a LOMR. These assumptions will be confirmed during the design process.

5.0 CONCLUSIONS AND NEXT STEPS

Next steps for the project include gathering additional site data in order to proceed with the full design of the outfall and BMPs/LID. Survey and geotechnical borings are needed to confirm elevations and utilities present in the project area. In particular, the area of the railroad crossing is of particular concern. Discussions should be initiated with the railroad as soon as possible to confirm requirements and timeline of approvals for working near and under the railroad and geotechnical investigation in the area of the railroad crossing is needed to confirm the most appropriate crossing technique.

ATTACHMENT A
LAWRENCE BROOK OUTFALL & BMP CONCEPTUAL DESIGN
PLANS, PROFILES, and DETAILS

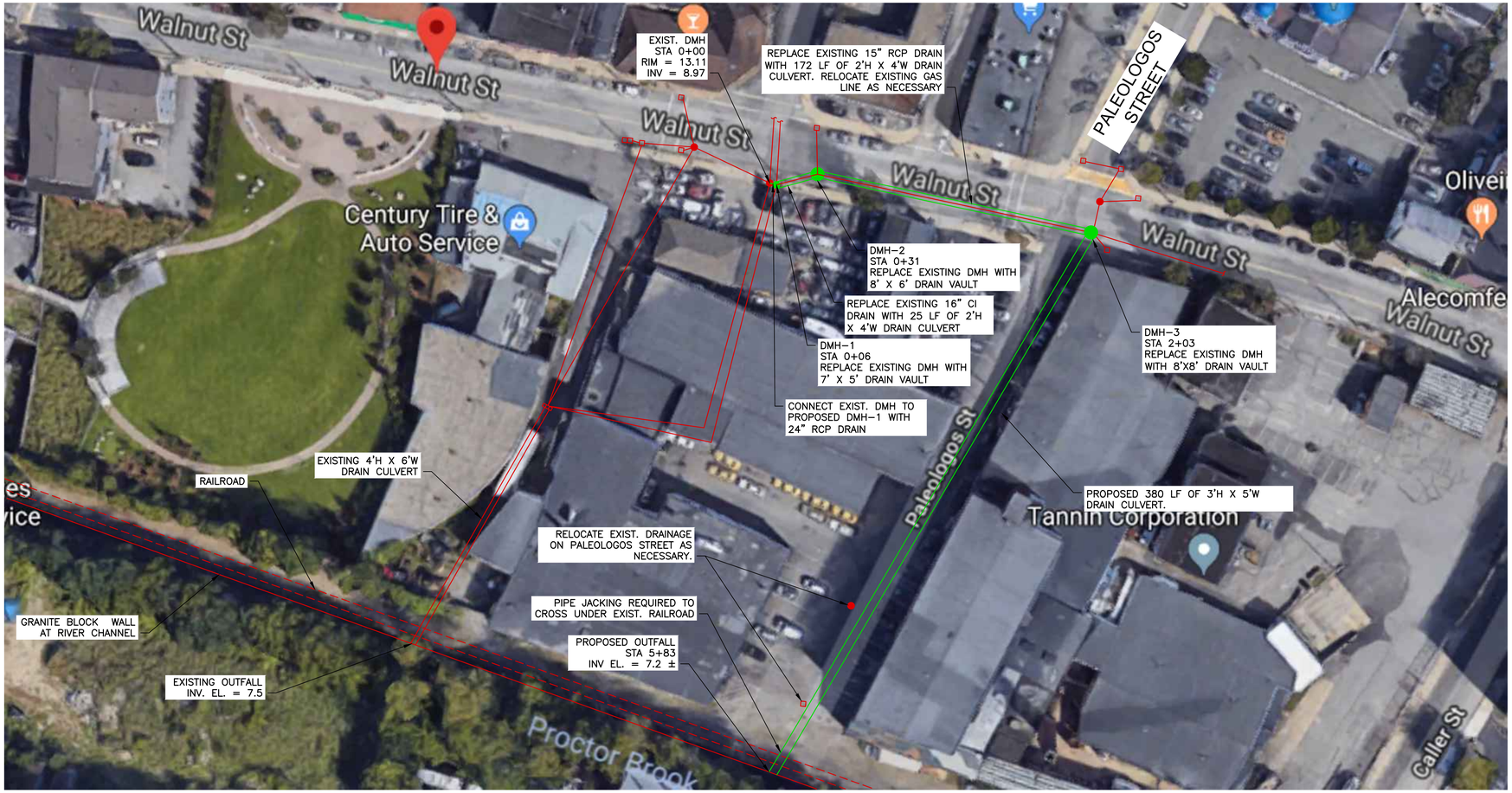

WALNUT AND PALEOLOGOS STREET PLAN

SCALE: 1"=40'

LEGEND

- EXISTING DRAIN MANHOLE
- EXISTING DRAIN LINE
- EXISTING CATCH BASIN
- RAIL ROAD
- PROPOSED DRAIN VAULT
- PROPOSED CULVERT

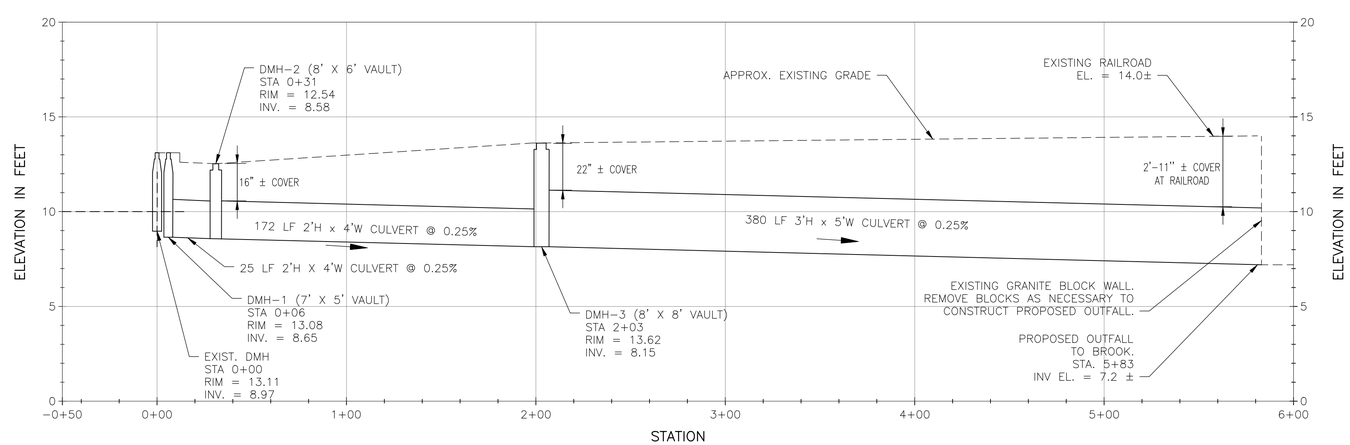

DRAIN PROFILE

SCALE: 1"=40' (HORIZ.)
1"= 4' (VERT.)

NOTES:

1. LOCATIONS AND INVERT ELEVATIONS OF EXISTING MANHOLES AND DRAINS ARE APPROXIMATE AND BASED UPON 1995 PLAN TITLED "CITY OF PEABODY DRAINAGE IMPROVEMENT PLAN" EASTERN LAND SURVEY ASSOCIATES INC. AND MODIFIED PER FIELD OBSERVATIONS MADE BY AECOM IN FALL OF 2017. FINAL LOCATION, SLOPE AND INVERT ELEVATIONS OF PROPOSED DRAINAGE WORK SHALL BE BASED UPON FUTURE SURVEY.

0 4 8 12
SCALE: 1" = 4'

40 0 40 80
SCALE: 1" = 40'

PATH/FILENAME: X:\60547746 PEABODY LAWRENCE BROOK\900 CAD\SK-1.DWG
LAST UPDATE: Friday, May 04, 2018 10:03:53 AM PLOT DATE: Friday, May 04, 2018 10:03:53 AM

AECOM

PROJECT

LAWRENCE BROOK WATERSHED ASSESSMENT

CLIENT

CITY OF PEABODY
CITY HALL, DEPARTMENT OF COMMUNITY DEVELOPMENT AND PLANNING
24 LOWELL STREET,
PEABODY, MA 01960

CONSULTANT

AECOM TECHNICAL SERVICES, INC.
250 APOLLO DRIVE
CHELMSFORD, MA 01824
PHONE: (978) 905-2100
www.aecom.com

REGISTRATION

ISSUE/REVISION

I/R	DATE	DESCRIPTION

PROJECT NUMBER

60547746

Designed By:	S. EISENLORD
Drawn By:	S. EISENLORD
Dept Check:	D. GOVE
Proj Check:	J. DOYLE-BREEN
Date:	MAY 2018
Scale:	AS NOTED

DISCIPLINE

GENERAL

SHEET TITLE

PALEOLOGOS STREET OUTFALL PLAN AND PROFILE

SHEET NUMBER

SK-001

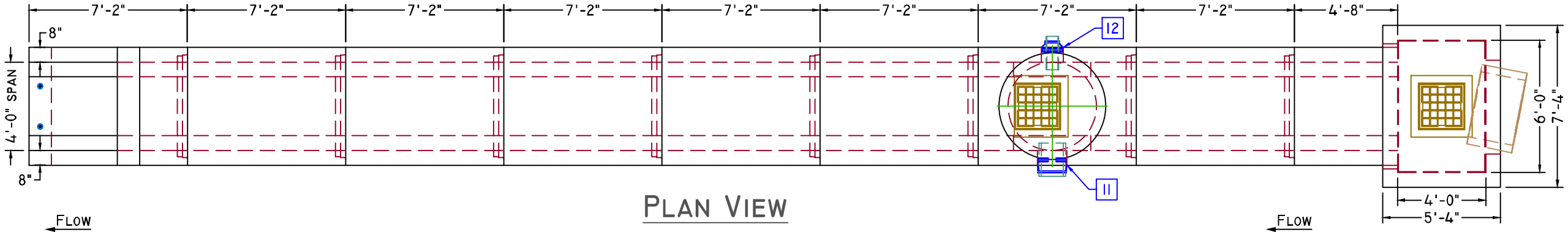

PLAN VIEW

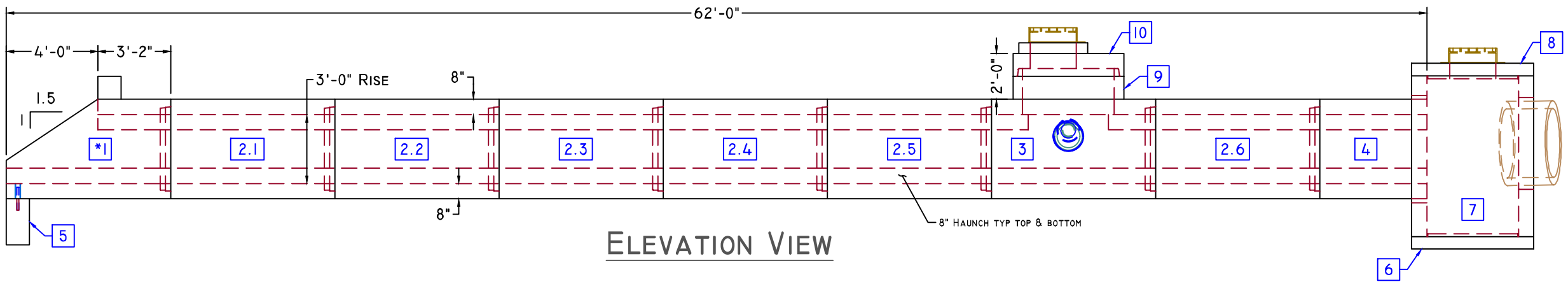

ELEVATION VIEW

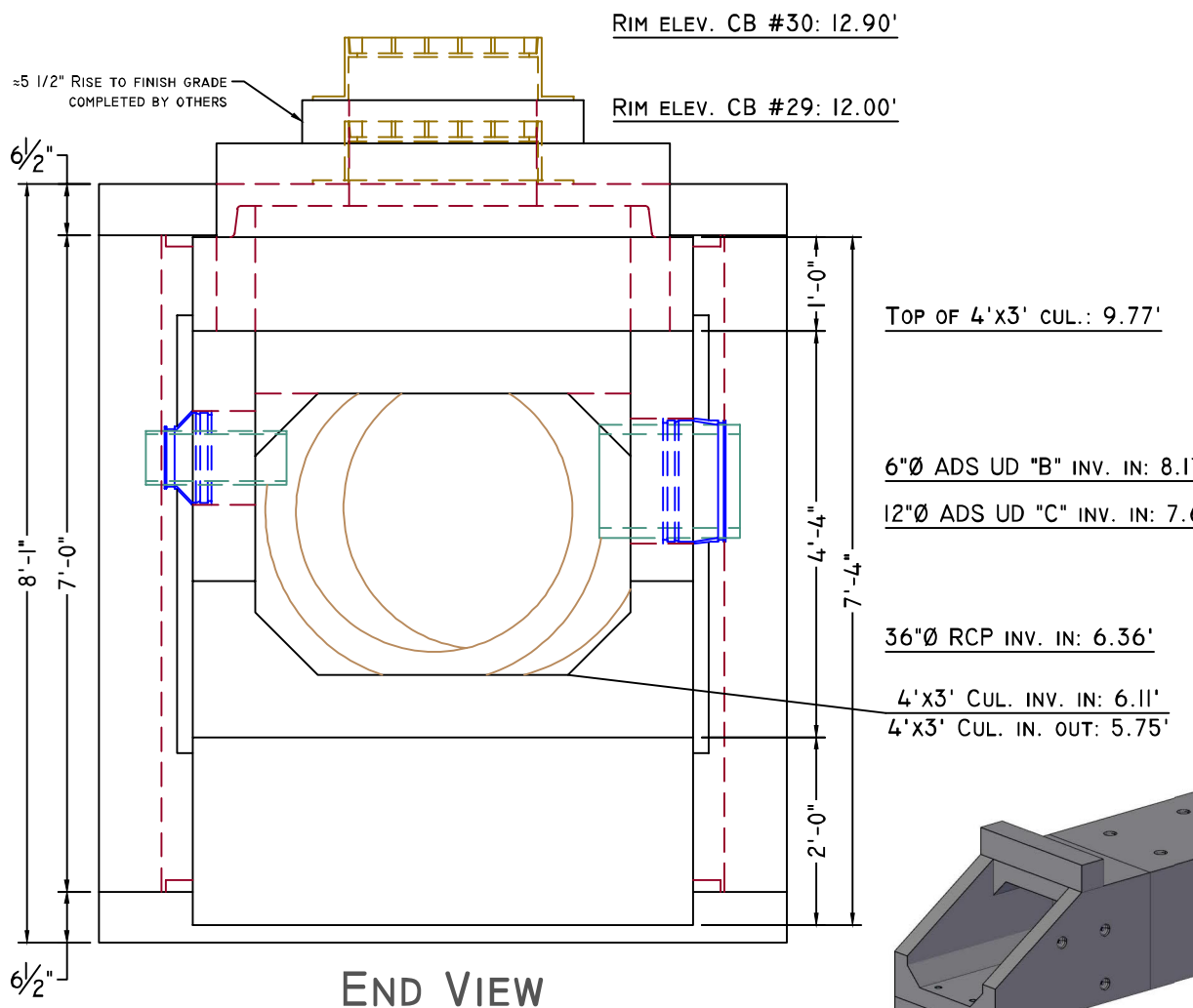

END VIEW

SCALE: 1/2" = 1'-0"

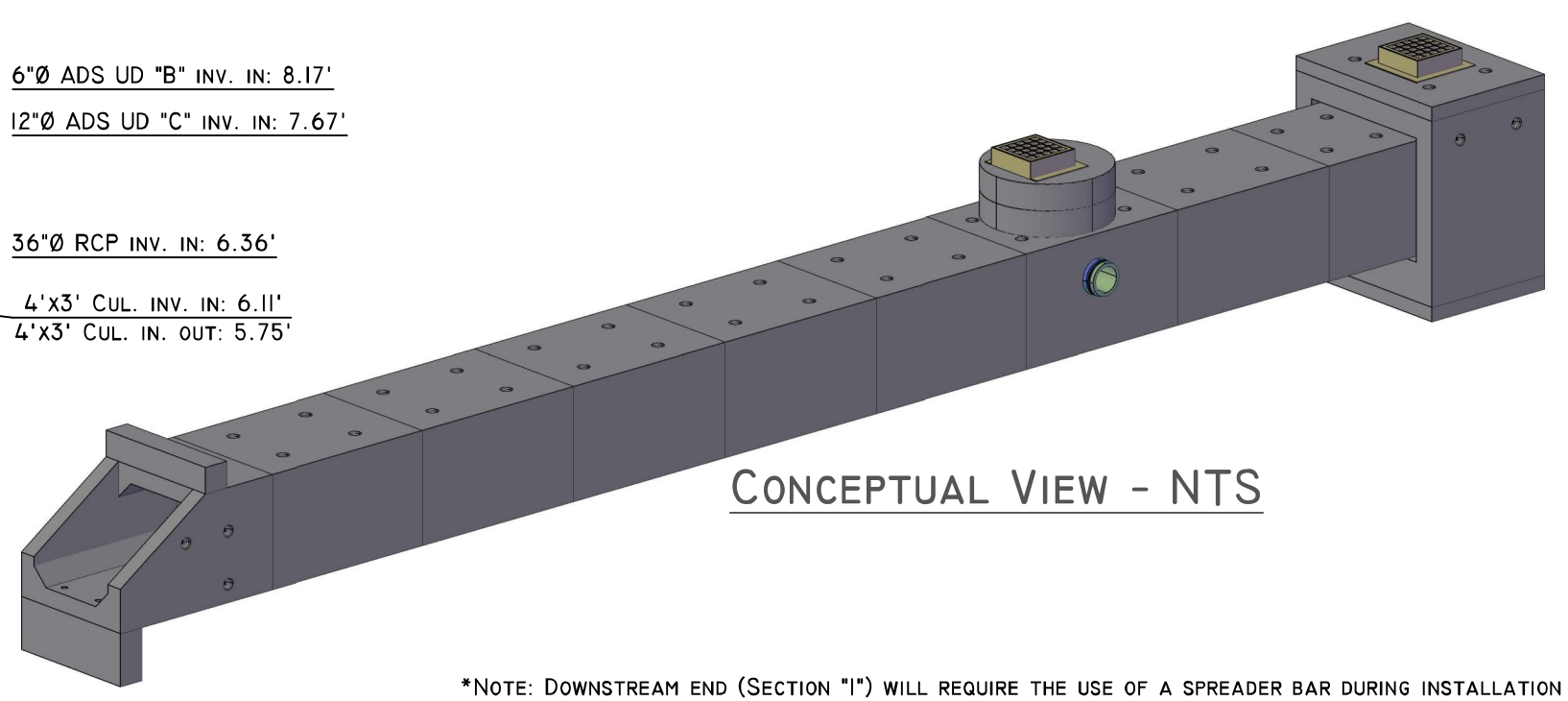

CONCEPTUAL VIEW - NTS

*NOTE: DOWNSTREAM END (SECTION "1") WILL REQUIRE THE USE OF A SPREADER BAR DURING INSTALLATION

American Concrete Industries
1717 STILLWATER AVE. VEAZIE, ME. 04401
TEL: 207-947-8334
FAX: 207-947-3580
WWW.AMERICANCONCRETE.COM

BILL OF MATERIALS

ITEM	QTY	
*1	(1)	7'-2" DOWNSTREAM END W/ ATTACHED
		HEADWALL (TOTAL WEIGHT: 10,425 #)
2	(6)	7'-2" MID SECTION (12,875 # EA)
3	(1)	7'-2" MID SECTION W/ 4'Ø OPENING
		WEIGHT: 11,165 #
4	(1)	4'-8" UPSTREAM END (8,680 #)
5	(1)	1' x 2' x 5'-4" TOEWALL (1,600 #)
	(2)	#8 x 12" TOEWALL PIN
6	(1)	5'-4" x 7'-4" BASE SLAB (3,595 #)
7	(1)	5'-4" x 7'-4" x 7' BARREL (11,505 #)
8	(1)	5'-4" x 7'-4" TOP SLAB (3,195 #)
9	(1)	4'Ø x 1' BARREL (1,005 #) FLAT JOINT
10	(1)	FLAT TOP COVER FOR 4'Ø (1,585 #)
11	(1)	S106-16 BOOT (12"Ø ADS)
12	(1)	S406-12B BOOT (6"Ø ADS)

DESIGN NOTES:

1. Concrete
- 1.1. COMP. STRENGTH MIN. 5,000PSI @ 28 DAYS
- 1.2. AIR-ENTRAINMENT: MIN. 5.5%

2. Structural Reinforcement:
- 2.1. BAR PER ASTM A615, GRADE 60
- 2.2. INTEGRATE REBAR WITH LIFTING INSERT(S)
- 2.3. INTERRUPTED BAR AREAS WILL BE REPLACED EACH SIDE WITH HALF THE AFFECTED AREA
- 2.4. DESIGNED FOR HL-93 WHEEL LOAD RATING
- 2.5. 2" CLR EXTERIOR, 1 1/2" CLR INTERIOR

3. Manufacturing / Installation:
- 3.1. JOINTS SEALED WITH BUTYL RUBBER SEALANT (JOINT GROWTH OF 1/2"± IS EXPECTED PER JOINT)
- 3.2. ALL FRAME & GRATES / COVERS ARE TO BE SUPPLIED & INSTALLED BY OTHERS; SHOWN FOR ILLUSTRATIVE PURPOSES ONLY

Note: Some details not shown for clarity
SCALE: 3/16" = 1'-0" Unless otherwise noted

STRUCTURE NAME:	4' x 3' x 62' BOX CULVERT
JOB NAME:	BAR HARBOR, RTE. 3
LOCATION:	BAR HARBOR, ME. (WIN: 19197.00)
CONTRACTOR:	SARGENT CORP.

DRAWN BY:	DATE:	
SSM	01/16/2017	C1.0
REV.#: 0.00	DATE: 01/16/2017	

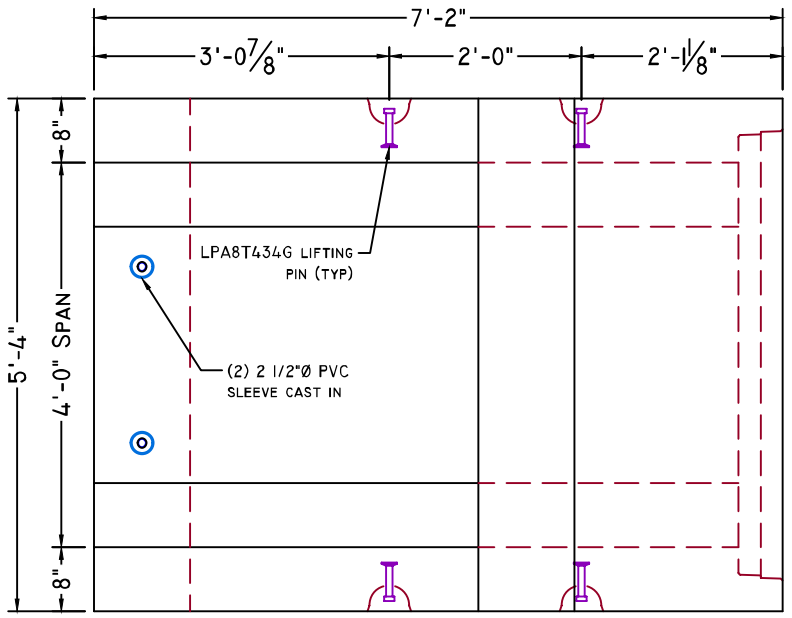

PLAN VIEW

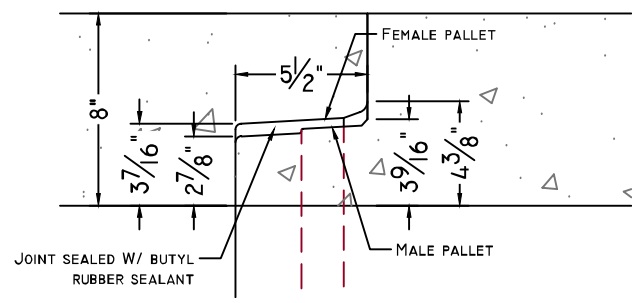

CULVERT JOINT DETAIL

SCALE: 1 1/2" = 1'-0"

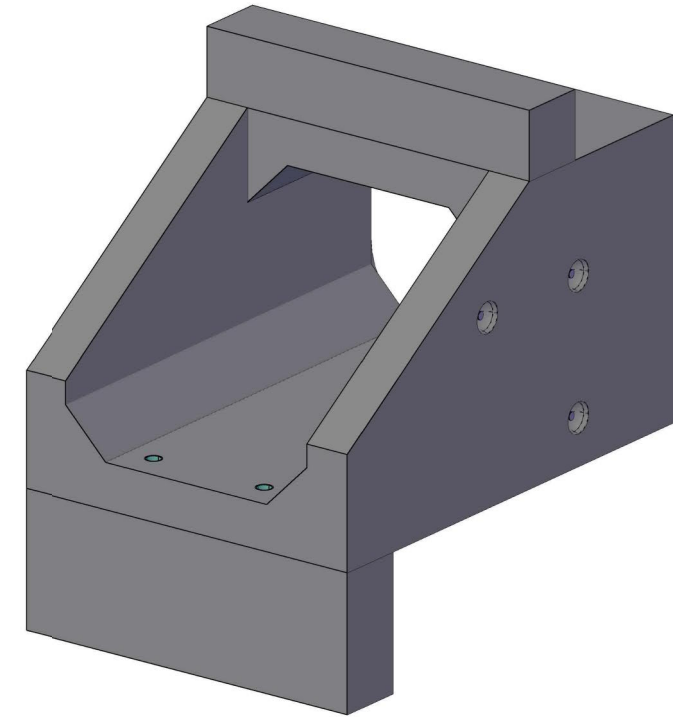

CONCEPTUAL VIEW - NTS

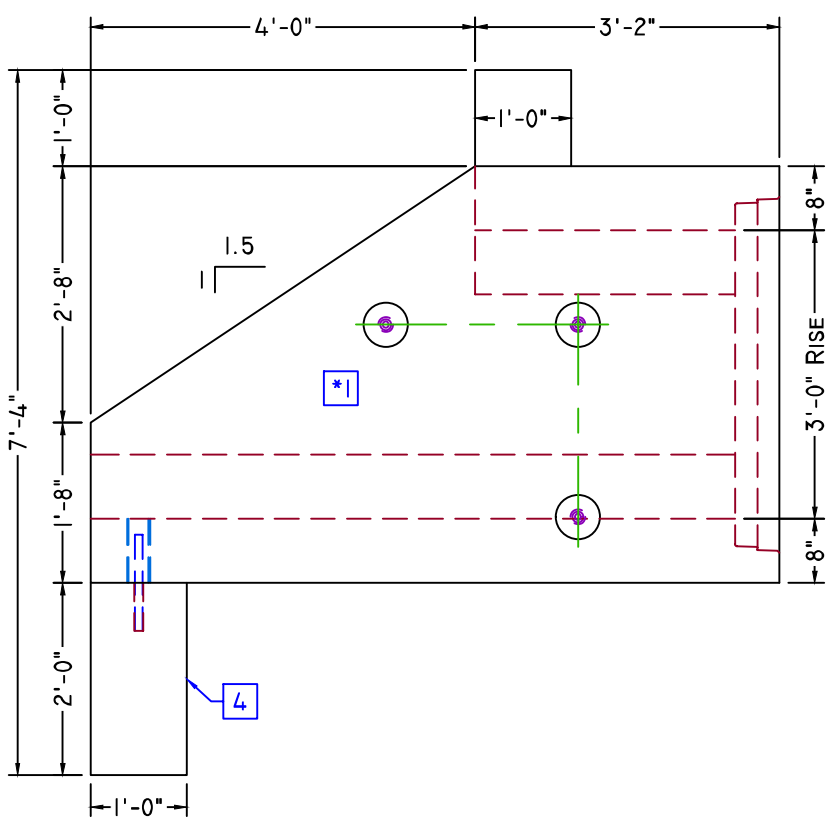

ELEVATION VIEW

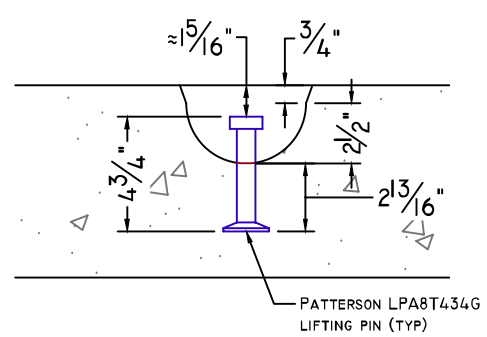

LIFTING PIN DETAIL

SCALE: 1 1/2" = 1'-0"

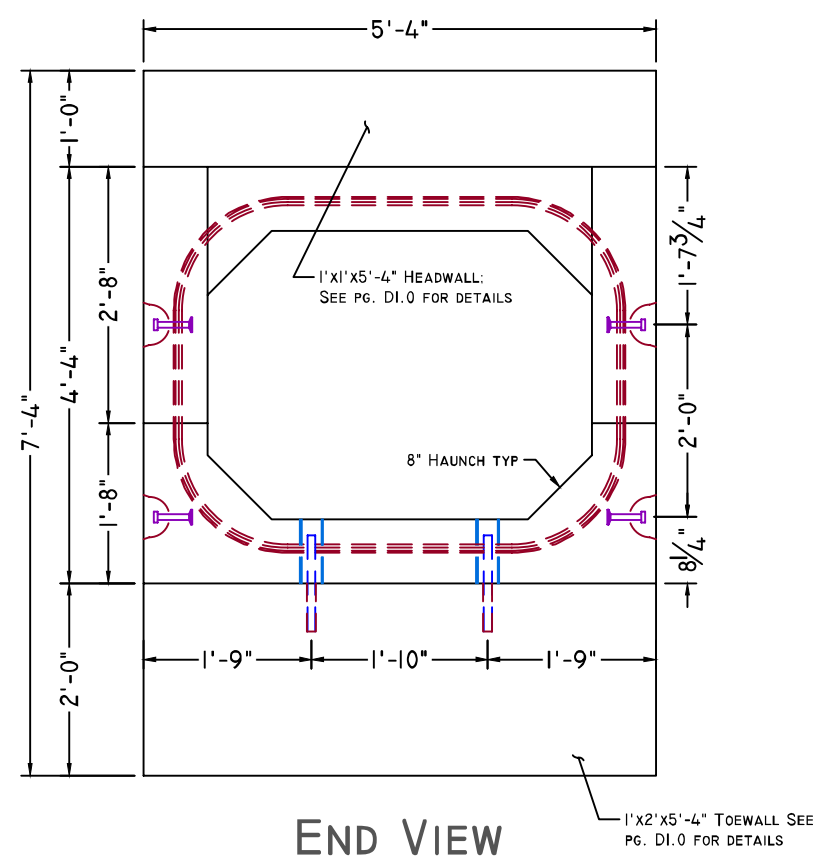

END VIEW

*NOTE: DOWNSTREAM END (SECTION "1") WILL REQUIRE THE USE OF A SPREADER BAR DURING INSTALLATION

American Concrete Industries
1717 Stillwater Ave. Veazie, ME. 04401
Tel: 207-947-8334
Fax: 207-947-3580
www.americanconcrete.com

ITEM	QTY	BILL OF MATERIALS
*1	(1)	7'-2" DOWNSTREAM END W/ ATTACHED
		HEADWALL (TOTAL WEIGHT: 10,425 #)
5	(1)	1' x 2' x 5'-4" TOEWALL (1,600 #)
	(2)	#8 x 12" TOEWALL PIN

DESIGN NOTES:

1. **Concrete**
   - 1.1. COMP. STRENGTH MIN. 5,000PSI @ 28 DAYS
   - 1.2. AIR-ENTRAINMENT: MIN. 5.5%
2. **Structural Reinforcement:**
   - 2.1. BAR PER ASTM A615, GRADE 60
   - 2.2. INTEGRATE REBAR WITH LIFTING INSERT(S)
   - 2.3. INTERRUPTED BAR AREAS WILL BE REPLACED EACH SIDE WITH HALF THE AFFECTED AREA
   - 2.4. DESIGNED FOR HL-93 WHEEL LOAD RATING
   - 2.5. 2" CLR EXTERIOR, 1 1/2" CLR INTERIOR
3. **Manufacturing / Installation:**
   - 3.1. JOINTS SEALED WITH BUTYL RUBBER SEALANT (JOINT GROWTH OF 1/2"± IS EXPECTED PER JOINT)
   - 3.2. ALL FRAME & GRATES / COVERS ARE TO BE SUPPLIED & INSTALLED BY OTHERS; SHOWN FOR ILLUSTRATIVE PURPOSES ONLY

Note: Some details not shown for clarity
SCALE: 1/2" = 1'-0" Unless otherwise noted

STRUCTURE NAME: 4' x 3' x 62' BOX CULVERT

JOB NAME: BAR HARBOR, RTE. 3

LOCATION: BAR HARBOR, ME. (WIN: 19197.00)

CONTRACTOR: SARGENT CORP.

DRAWN BY:	DATE:	
SSM	01/16/2017	C1.1
REV.#:	DATE:	
0.00	01/16/2017	

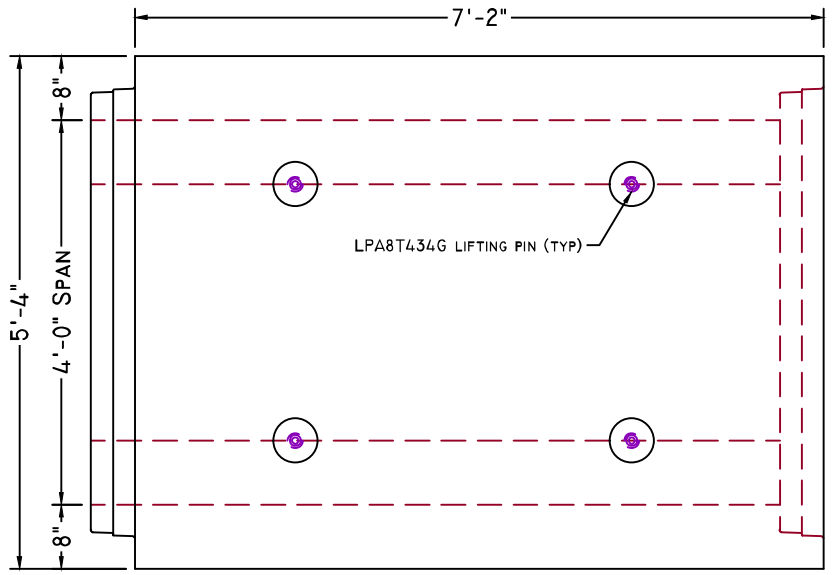

PLAN VIEW

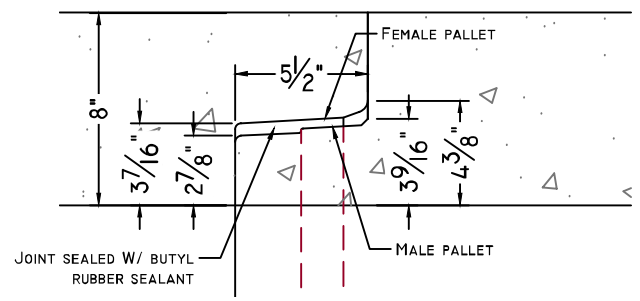

CULVERT JOINT DETAIL

SCALE: 1 1/2" = 1'-0"

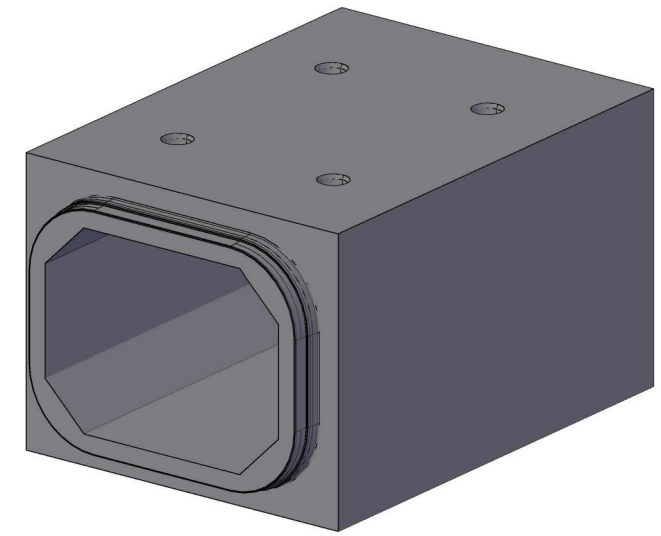

CONCEPTUAL VIEW - NTS

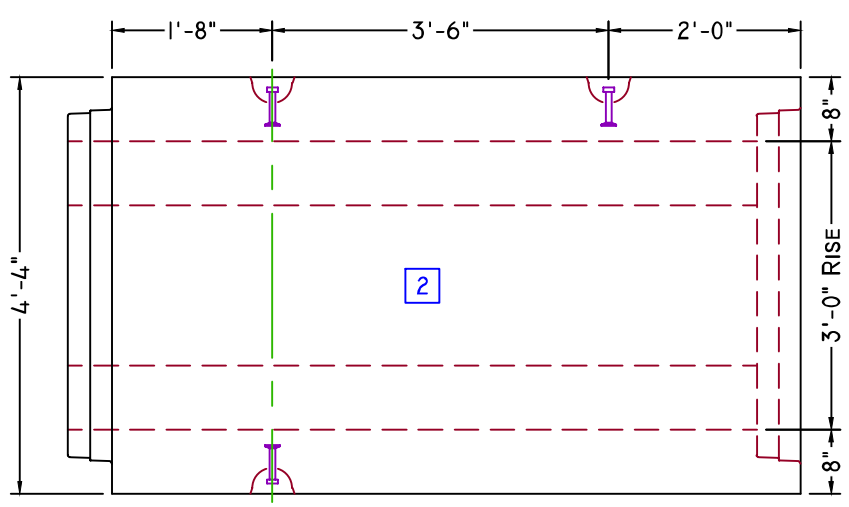

ELEVATION VIEW

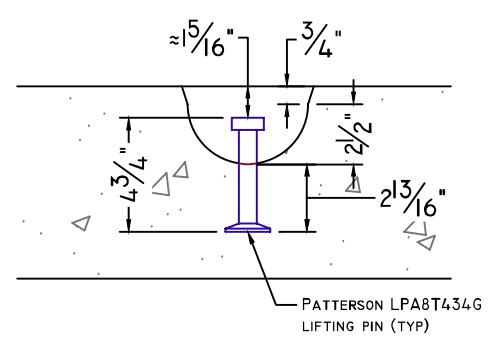

LIFTING PIN DETAIL

SCALE: 1 1/2" = 1'-0"

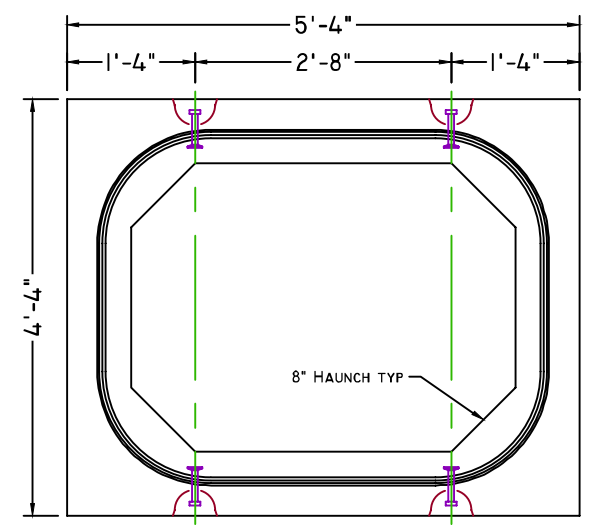

END VIEW

American Concrete Industries
1717 Stillwater Ave. Veazie, ME. 04401
Tel: 207-947-8334
Fax: 207-947-3580
www.americanconcrete.com

ITEM	QTY	BILL OF MATERIALS
2	(6)	7'-2" Mid section (12,875 # ea)

Design Notes:

1. **Concrete**
   - 1.1. Comp. strength min. 5,000psi @ 28 days
   - 1.2. Air-Entrainment: min. 5.5%
2. **Structural Reinforcement:**
   - 2.1. Bar per ASTM A615, Grade 60
   - 2.2. Integrate rebar with lifting insert(s)
   - 2.3. Interrupted bar areas will be replaced each side with half the affected area
   - 2.4. Designed for HL-93 wheel load rating
   - 2.5. 2" CLR Exterior, 1 1/2" CLR Interior
3. **Manufacturing / Installation:**
   - 3.1. Joints sealed with butyl rubber sealant (Joint growth of 1/2"± is expected per joint)
   - 3.2. All frame & grates / covers are to be supplied & installed by others; Shown for illustrative purposes only

Note: Some details not shown for clarity
SCALE: 1/2" = 1'-0" Unless otherwise noted

Structure name:	4' x 3' x 62' Box Culvert
Job name:	Bar Harbor, Rte. 3
Location:	Bar Harbor, ME. (WIN: 19197.00)
Contractor:	Sargent Corp.

Drawn by:	Date:	
SSM	01/16/2017	C1.2
Rev.#: 0.00	Date: 01/16/2017	

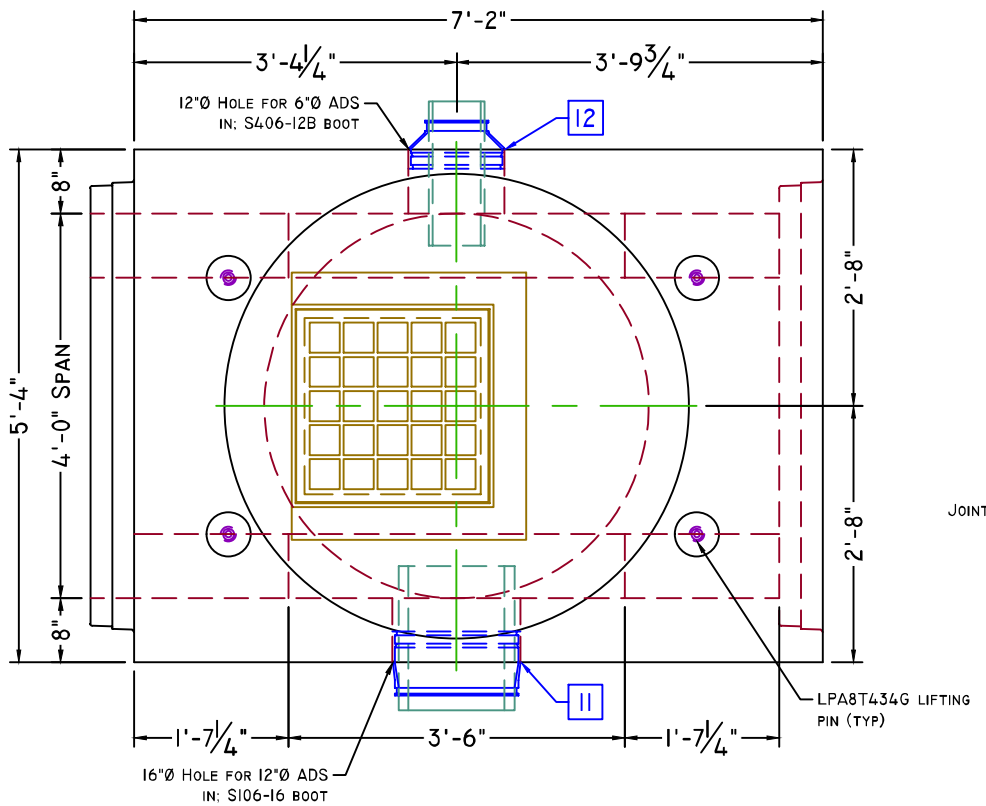

PLAN VIEW

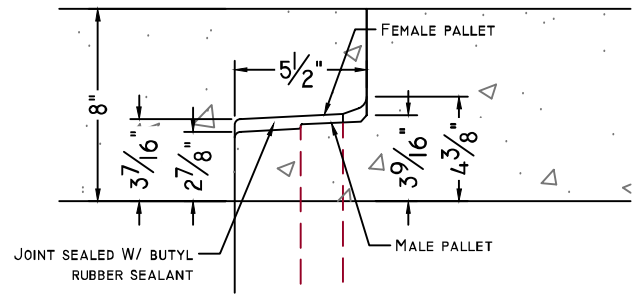

CULVERT JOINT DETAIL

SCALE: 1 1/2" = 1'-0"

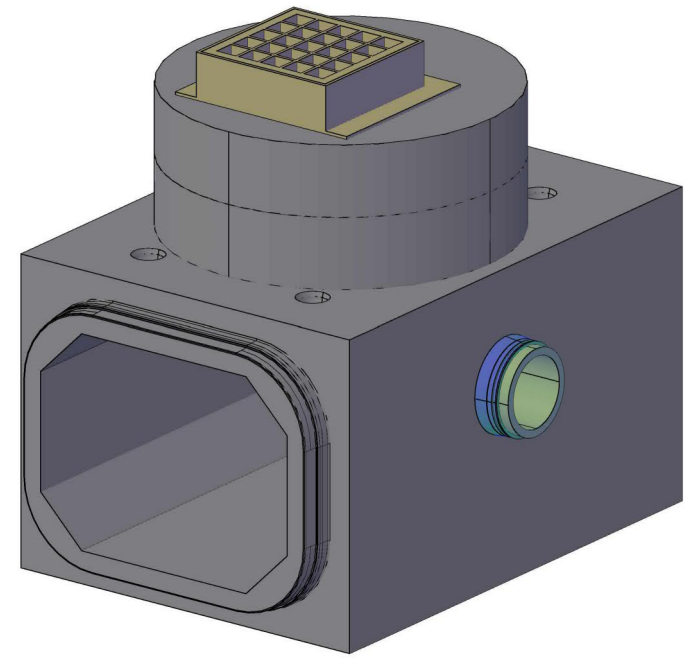

CONCEPTUAL VIEW - NTS

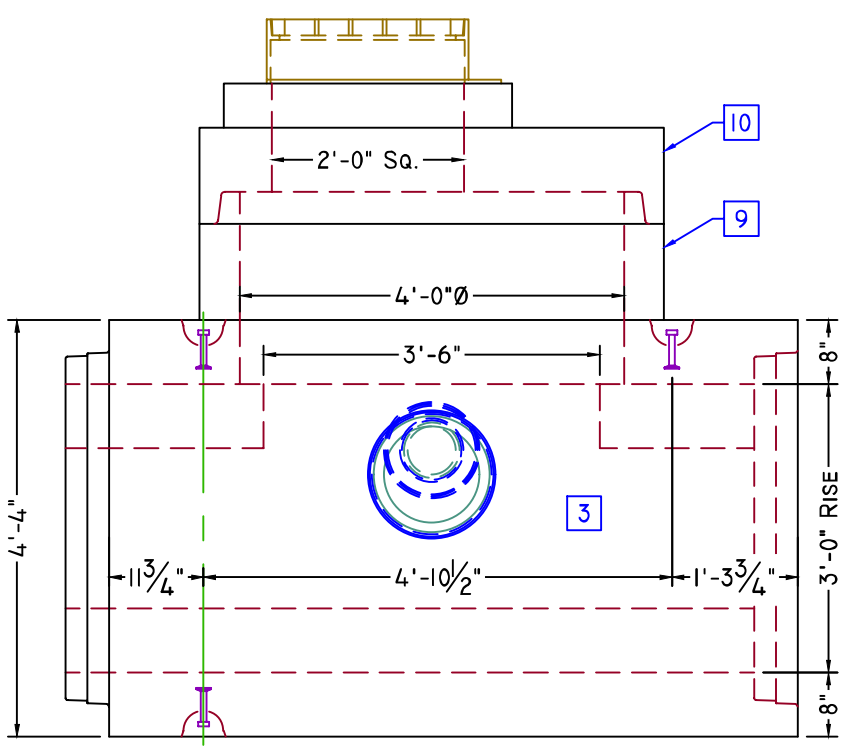

ELEVATION VIEW

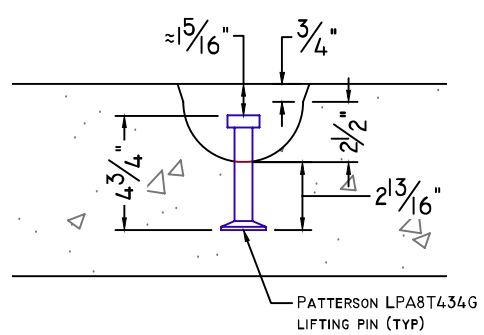

LIFTING PIN DETAIL

SCALE: 1 1/2" = 1'-0"

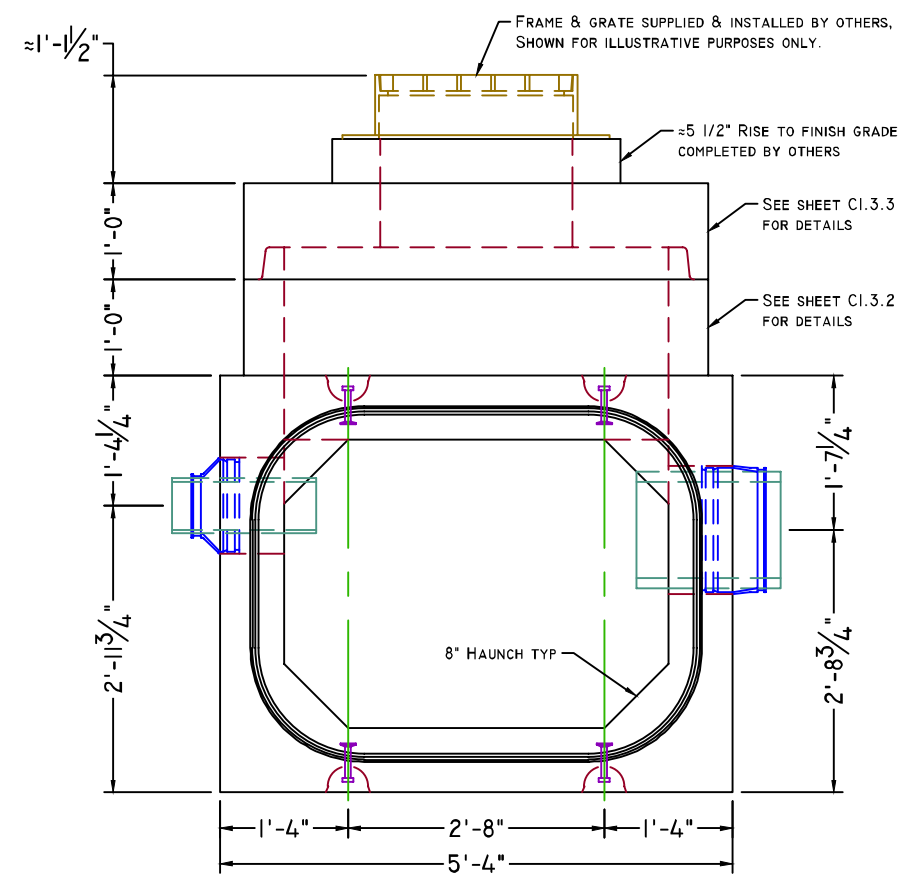

END VIEW

American Concrete Industries
1717 Stillwater Ave. Veazie, ME. 04401
Tel: 207-947-8334
Fax: 207-947-3580
www.americanconcrete.com

ITEM	QTY	BILL OF MATERIALS
3	(1)	7'-2" Mid section w/ 4'Ø opening
		Weight: 11,165 #
9	(1)	4'Ø x 1' Barrel (1,005 #) Flat Joint
10	(1)	Flat top cover for 4'Ø (1,585 #)
11	(1)	S106-16 Boot (12"Ø ADS)
12	(1)	S406-12B Boot (6"Ø ADS)

Design Notes:

1. **Concrete**
   - 1.1. Comp. strength min. 5,000psi @ 28 days
   - 1.2. Air-Entrainment: min. 5.5%
2. **Structural Reinforcement:**
   - 2.1. Bar per ASTM A615, Grade 60
   - 2.2. Integrate rebar with lifting insert(s)
   - 2.3. Interrupted bar areas will be replaced each side with half the affected area
   - 2.4. Designed for HL-93 wheel load rating
   - 2.5. 2" CLR Exterior, 1 1/2" CLR Interior
3. **Manufacturing / Installation:**
   - 3.1. Joints sealed with butyl rubber sealant (Joint growth of 1/2"± is expected per joint)
   - 3.2. All frame & grates / covers are to be supplied & installed by others; Shown for illustrative purposes only

Note: Some details not shown for clarity
SCALE: 1/2" = 1'-0" Unless otherwise noted

Structure name: 4' x 3' x 62' Box Culvert

Job name: Bar Harbor, Rte. 3

Location: Bar Harbor, ME. (WIN: 19197.00)

Contractor: Sargent Corp.

Drawn by:	Date:	
SSM	01/16/2017	C1.3
Rev.#: 0.00	Date: 01/16/2017	

SECTION-3 REINFORCING ONLY

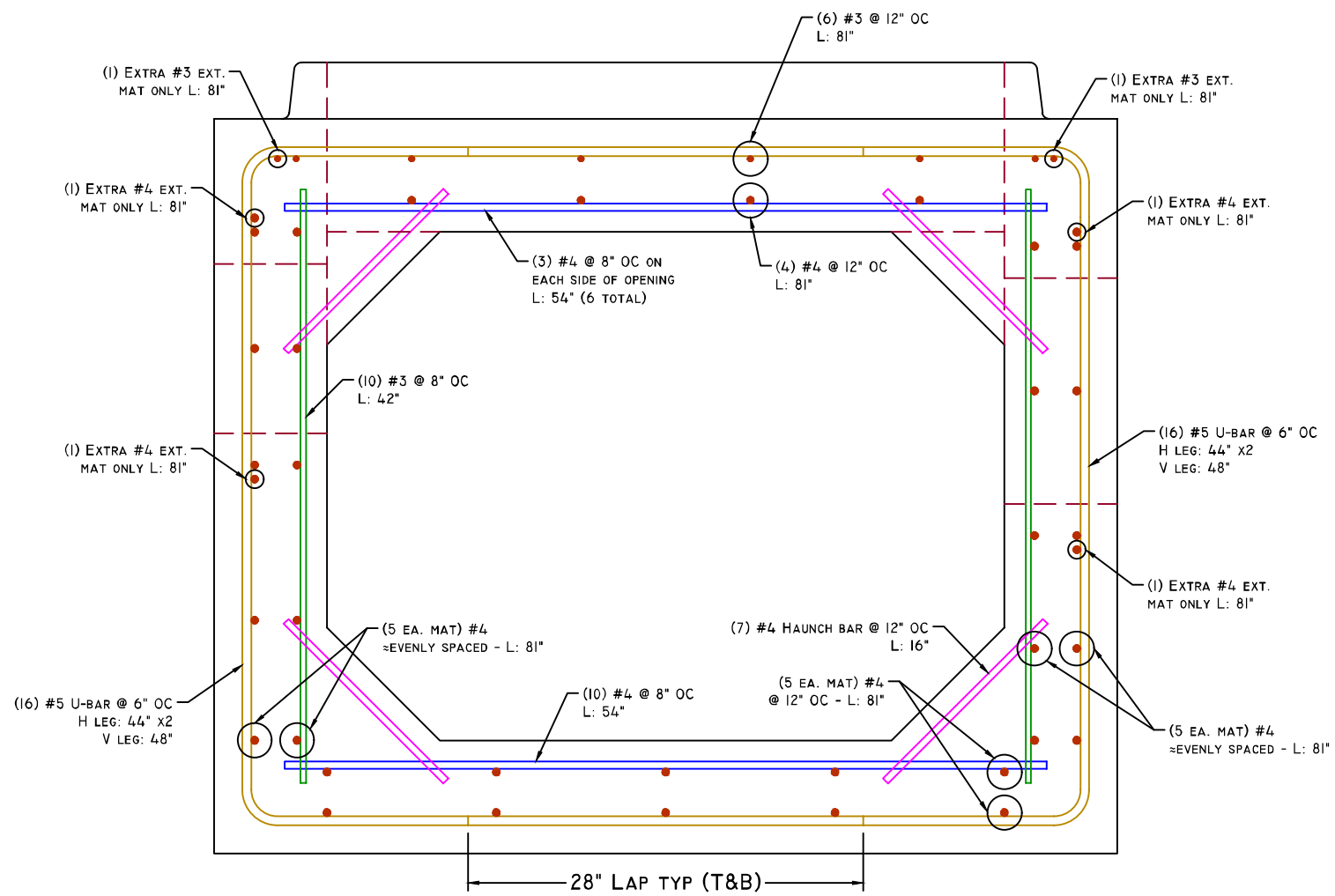

SECTION-3 REINFORCING

SCALE: 1" = 1'-0"

NOTE: TRIMMING BAR AROUND OPENINGS WILL BE REQUIRED. 1 1/2" CLR TYP

American Concrete Industries
1717 STILLWATER AVE. VEAZIE, ME. 04401
TEL: 207-947-8334
FAX: 207-947-3580
WWW.AMERICANCONCRETE.COM

ITEM	QTY	BILL OF MATERIALS

DESIGN NOTES:

1. **Concrete**
   - 1.1. COMP. STRENGTH MIN. 5,000PSI @ 28 DAYS
   - 1.2. AIR-ENTRAINMENT: MIN. 5.5%
2. **Structural Reinforcement:**
   - 2.1. BAR PER ASTM A615, GRADE 60
   - 2.2. INTEGRATE REBAR WITH LIFTING INSERT(S)
   - 2.3. INTERRUPTED BAR AREAS WILL BE REPLACED EACH SIDE WITH HALF THE AFFECTED AREA
   - 2.4. DESIGNED FOR HL-93 WHEEL LOAD RATING
   - 2.5. 2" CLR EXTERIOR, 1 1/2" CLR INTERIOR
3. **Manufacturing / Installation:**
   - 3.1. JOINTS SEALED WITH BUTYL RUBBER SEALANT (JOINT GROWTH OF 1/2"± IS EXPECTED PER JOINT)
   - 3.2. ALL FRAME & GRATES / COVERS ARE TO BE SUPPLIED & INSTALLED BY OTHERS; SHOWN FOR ILLUSTRATIVE PURPOSES ONLY

Note: Some details not shown for clarity
SCALE: 1" = 1'-0" Unless otherwise noted

STRUCTURE NAME: 4' x 3' x 62' BOX CULVERT

JOB NAME: BAR HARBOR, RTE. 3

LOCATION: BAR HARBOR, ME. (WIN: 19197.00)

CONTRACTOR: SARGENT CORP.

DRAWN BY:	DATE:	
SSM	01/16/2017	C1.3.1
REV.#:	DATE:	
0.00	01/16/2017	

American Concrete Industries

4'Ø x 1' Barrel

CB #30 - Bar Harbor, Rte. 3 - WIN: 19197.00

Sargent Corp. | Bar Harbor, Me. | PG: C1.3.2

Exterior Coating: NO ☒ YES ☐

Bill of Materials

(1)	4'Ø x 1' Barrel (1,005 #) Flat Joint

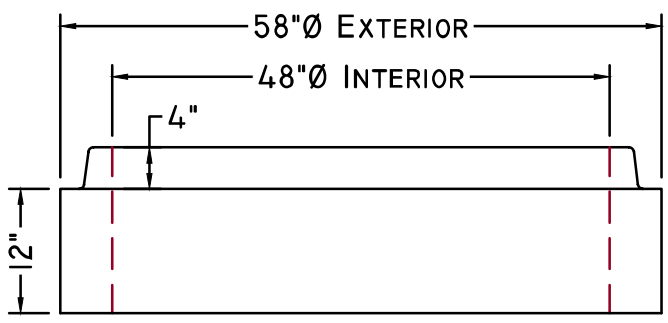

Elevation View

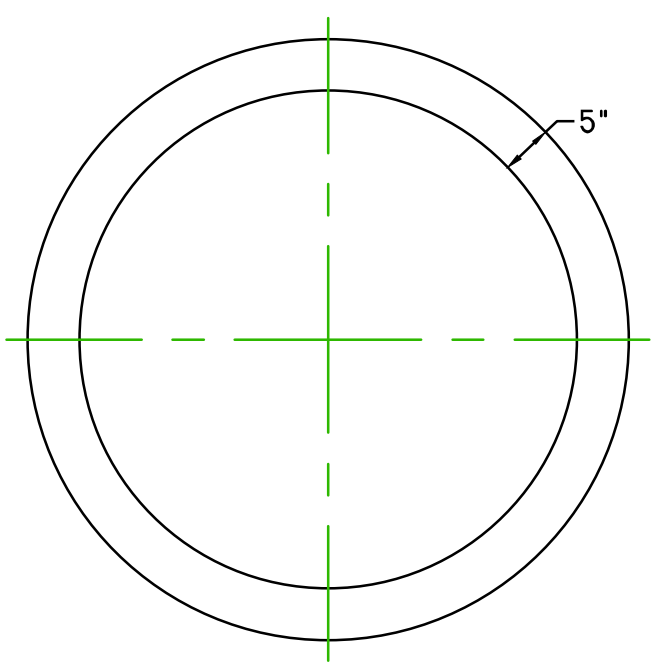

Plan View

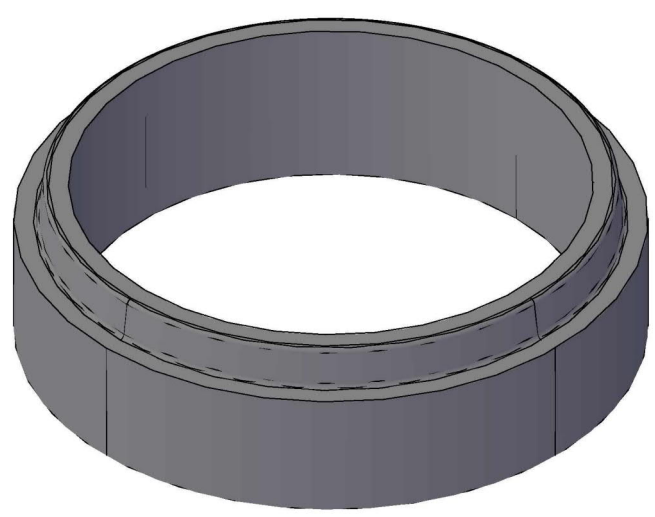

Conceptual View - NTS

STATE OF MAINE
IAN R. RILEY
No. 13729
1-16-2017
LICENSED
PROFESSIONAL ENGINEER

See standard manhole specifications for more information

WWW.AMERICANCONCRETE.COM
1717 Stillwater Ave.
Veazie, ME. 04401
Tel: (207) 947-8334 | Fax: (207) 947-3580

WWW.SUPERIORCONCRETE.COM
982 Minot Ave.
Auburn, ME. 04210
Tel: (207) 784-1388 | Fax: (207) 783-4039

Drawn date: 01/16/2017	Rev. #:	Rev. date:
Scale: 1/2" = 1'-0" Unless otherwise noted	Drawn by: SSM	Project manager: T.B.

American Concrete Industries

Flat Top Cover For 4'Ø

CB #30 - Bar Harbor, Rte. 3 - WIN: 19197.00

Sargent Corp. | Bar Harbor, Me. | PG: C1.3.3

Exterior Coating: NO ☒ YES ☐

Bill of Materials

(1)	Flat top cover for 4'Ø (1,585 #)

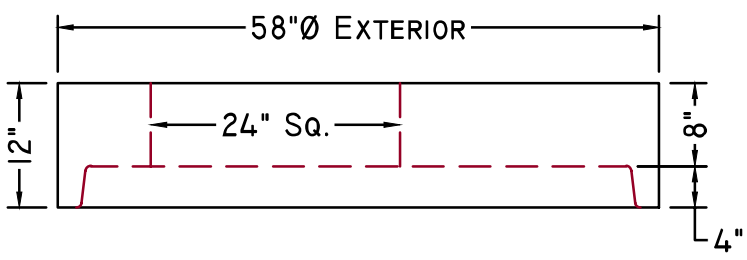

Elevation View

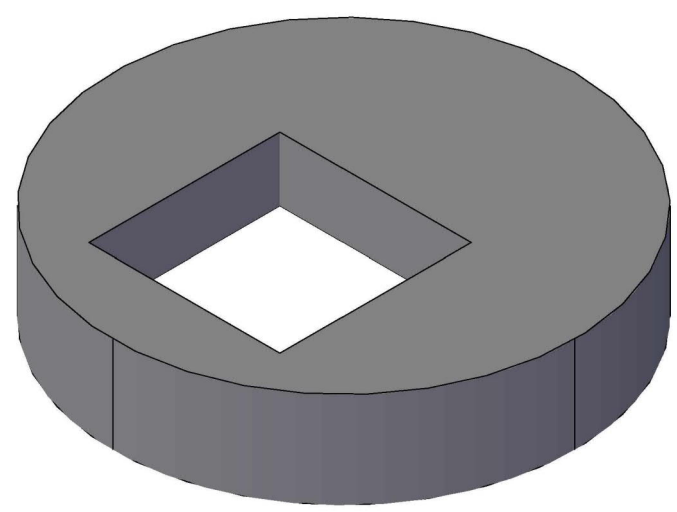

Conceptual View - NTS

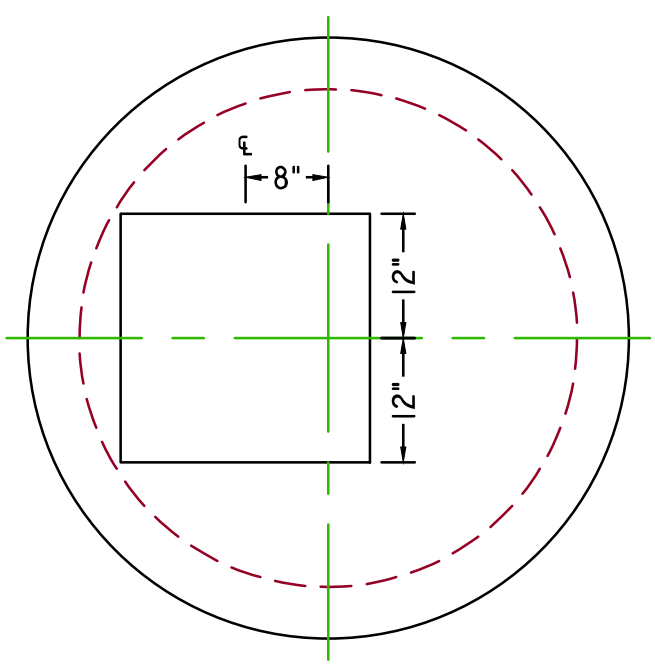

Plan View

STATE OF MAINE
IAN R. RILEY
No. 13729
1-16-2017
LICENSED
PROFESSIONAL ENGINEER

See standard manhole specifications for more information

WWW.AMERICANCONCRETE.COM
1717 Stillwater Ave.
Veazie, ME. 04401
Tel: (207) 947-8334 | Fax: (207) 947-3580

WWW.SUPERIORCONCRETE.COM
982 Minot Ave.
Auburn, ME. 04210
Tel: (207) 784-1388 | Fax: (207) 783-4039

Drawn date: 01/16/2017	Rev. #:	Rev. date:
Scale: 1/2" = 1'-0" Unless otherwise noted	Drawn by: SSM	Project manager: T.B.

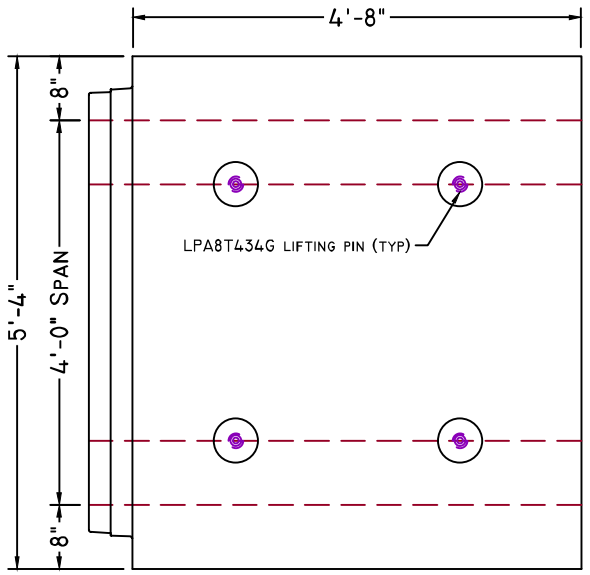

PLAN VIEW

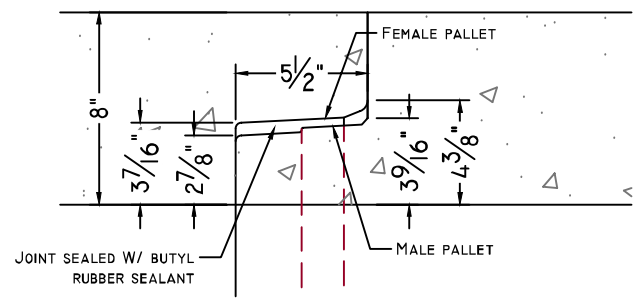

CULVERT JOINT DETAIL

SCALE: 1 1/2" = 1'-0"

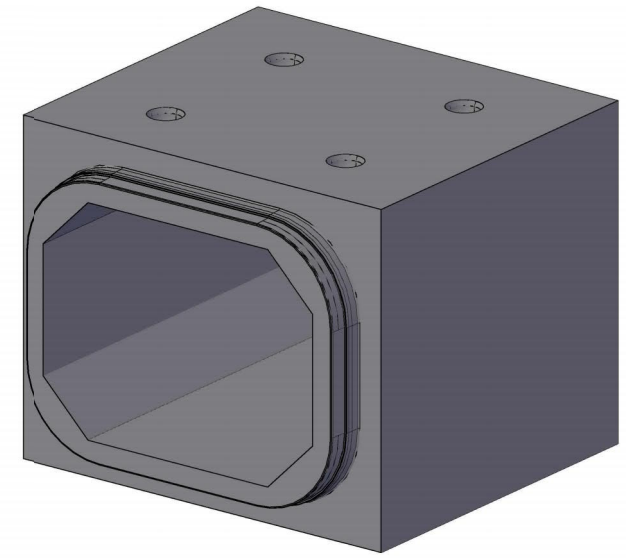

CONCEPTUAL VIEW - NTS

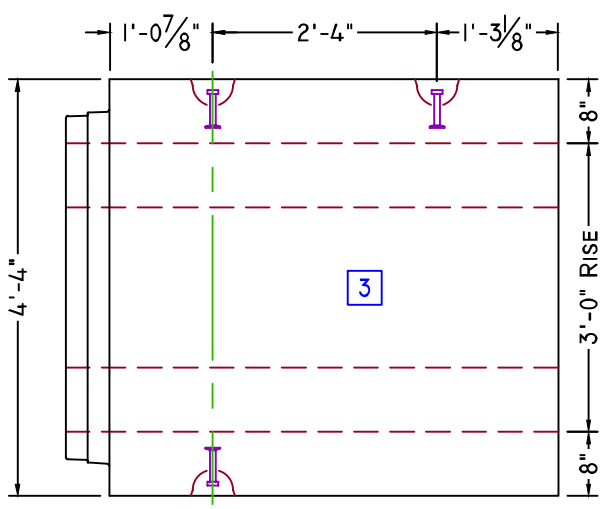

ELEVATION VIEW

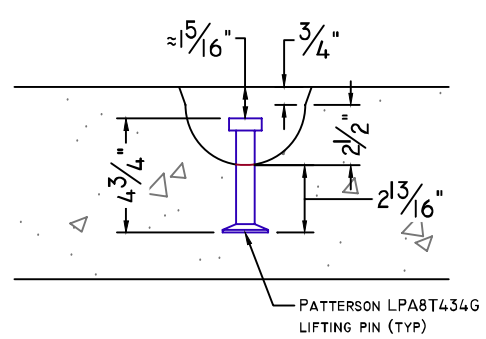

LIFTING PIN DETAIL

SCALE: 1 1/2" = 1'-0"

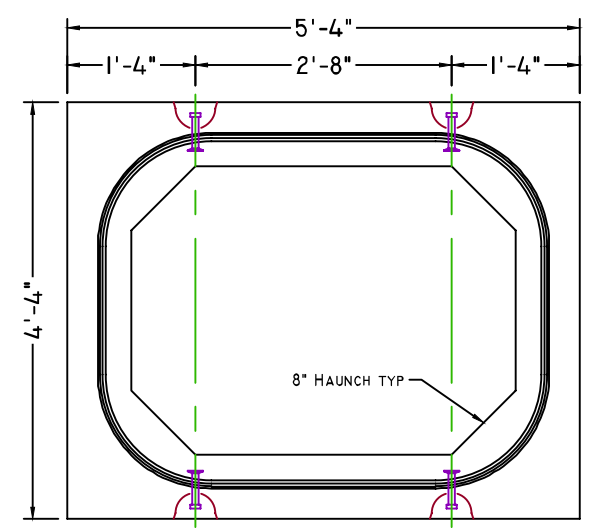

END VIEW

American Concrete Industries
1717 Stillwater Ave. Veazie, ME. 04401
Tel: 207-947-8334
Fax: 207-947-3580
www.americanconcrete.com

ITEM	QTY	BILL OF MATERIALS
4	(1)	4'-8" Upstream end (8,680 #)

Design Notes:

1. **Concrete**
   - 1.1. Comp. strength min. 5,000psi @ 28 days
   - 1.2. Air-Entrainment: min. 5.5%
2. **Structural Reinforcement:**
   - 2.1. Bar per ASTM A615, Grade 60
   - 2.2. Integrate rebar with lifting insert(s)
   - 2.3. Interrupted bar areas will be replaced each side with half the affected area
   - 2.4. Designed for HL-93 wheel load rating
   - 2.5. 2" CLR Exterior, 1 1/2" CLR Interior
3. **Manufacturing / Installation:**
   - 3.1. Joints sealed with butyl rubber sealant (Joint growth of 1/2"± is expected per joint)
   - 3.2. All frame & grates / covers are to be supplied & installed by others; Shown for illustrative purposes only

Note: Some details not shown for clarity
SCALE: 1/2" = 1'-0" Unless otherwise noted

Structure name:	4' x 3' x 62' Box Culvert
Job name:	Bar Harbor, Rte. 3
Location:	Bar Harbor, ME. (WIN: 19197.00)
Contractor:	Sargent Corp.

Drawn by:	Date:	
SSM	01/16/2017	C1.4
Rev.#: 0.00	Date: 01/16/2017	

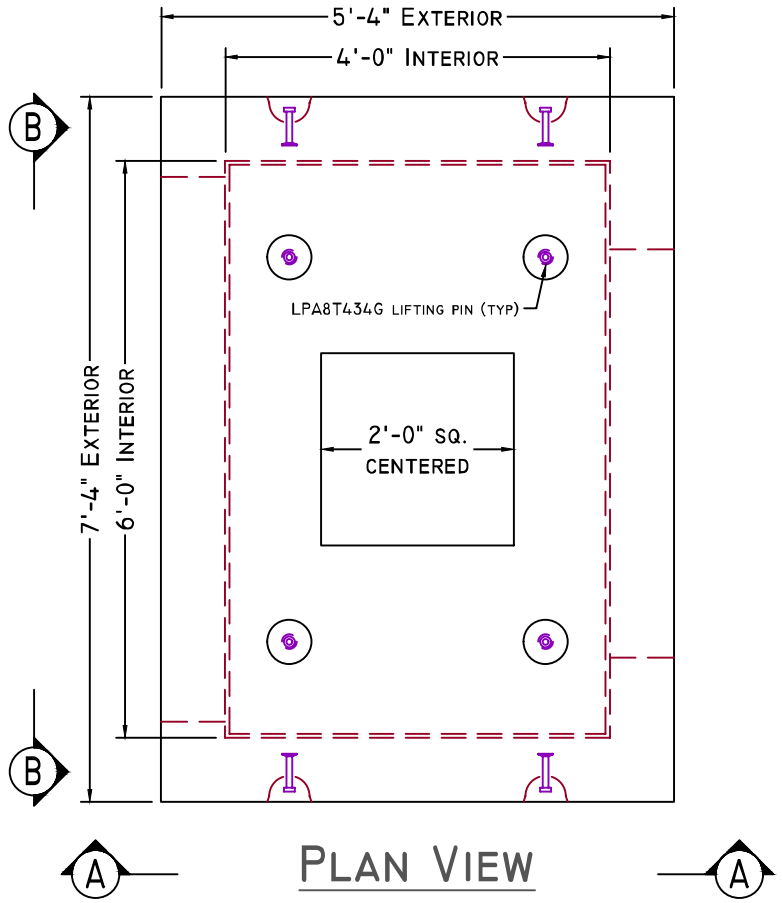

PLAN VIEW

CONCEPTUAL VIEW

SCALE: NTS

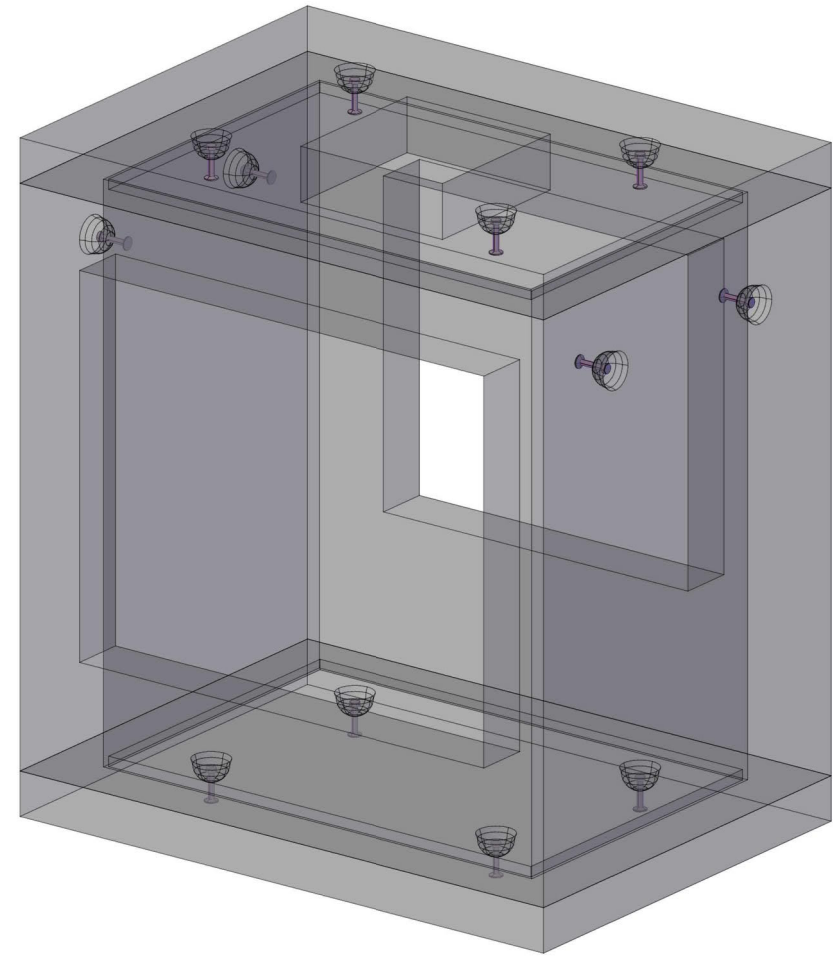

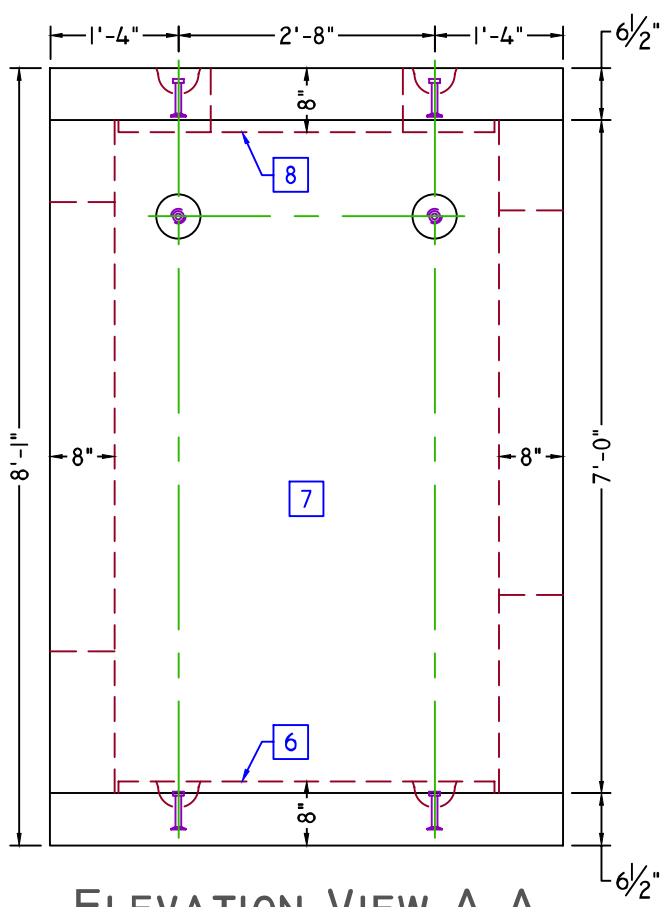

ELEVATION VIEW A-A

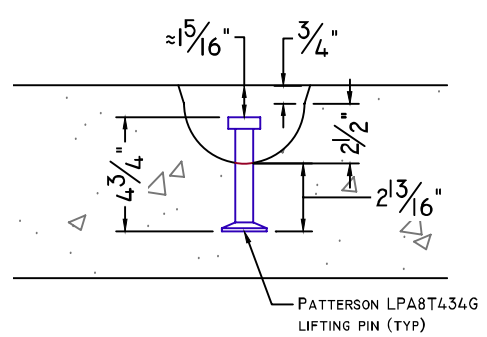

LIFTING PIN DETAIL

SCALE: 1 1/2" = 1'-0"

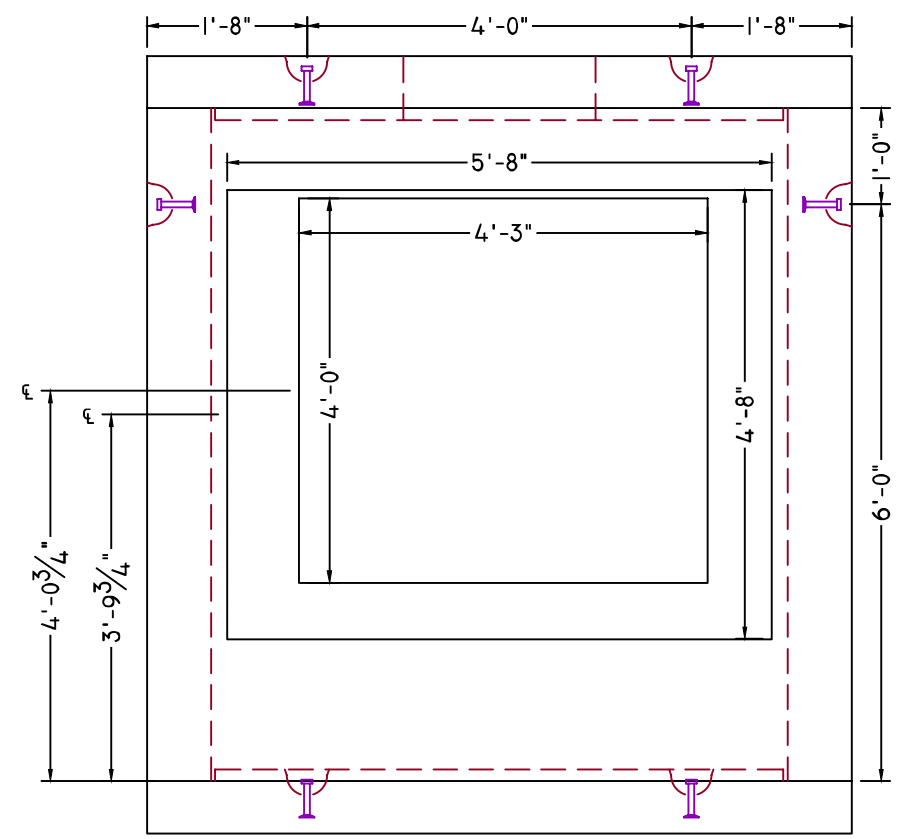

ELEVATION VIEW B-B

American Concrete Industries
1717 Stillwater Ave. Veazie, ME. 04401
Tel: 207-947-8334
Fax: 207-947-3580
www.americanconcrete.com

ITEM	QTY	BILL OF MATERIALS
6	(1)	5'-4" x 7'-4" Base slab (3,595 #)
7	(1)	5'-4" x 7'-4" x 7' Barrel (11,505 #)
8	(1)	5'-4" x 7'-4" Top slab (3,195 #)

DESIGN NOTES:

1. Concrete

1.1. Comp. strength min. 5,000psi @ 28 days

1.2. Air-Entrainment: min. 5.5%

2. Structural Reinforcement:

2.1. Bar per ASTM A615, Grade 60

2.2. Integrate rebar with lifting insert(s)

2.3. Interrupted bar areas will be replaced each side with half the affected area

2.4. Designed for HL-93 wheel load rating

2.5. 2" CLR Exterior, 1 1/2" CLR Interior

3. Manufacturing / Installation:

3.1. Joints sealed with butyl rubber sealant (Joint growth of 1/2"± is expected per joint)

3.2. All frame & grates / covers are to be supplied & installed by others; Shown for illustrative purposes only

Note: Some details not shown for clarity
SCALE: 1/2" = 1'-0" Unless otherwise noted

Structure name:	4' x 3' x 62' Box Culvert
Job name:	Bar Harbor, Rte. 3
Location:	Bar Harbor, ME. (WIN: 19197.00)
Contractor:	Sargent Corp.

DRAWN BY:	DATE:	
SSM	01/16/2017	C1.5
REV.#: 0.00	DATE: 01/16/2017	

Base Slab

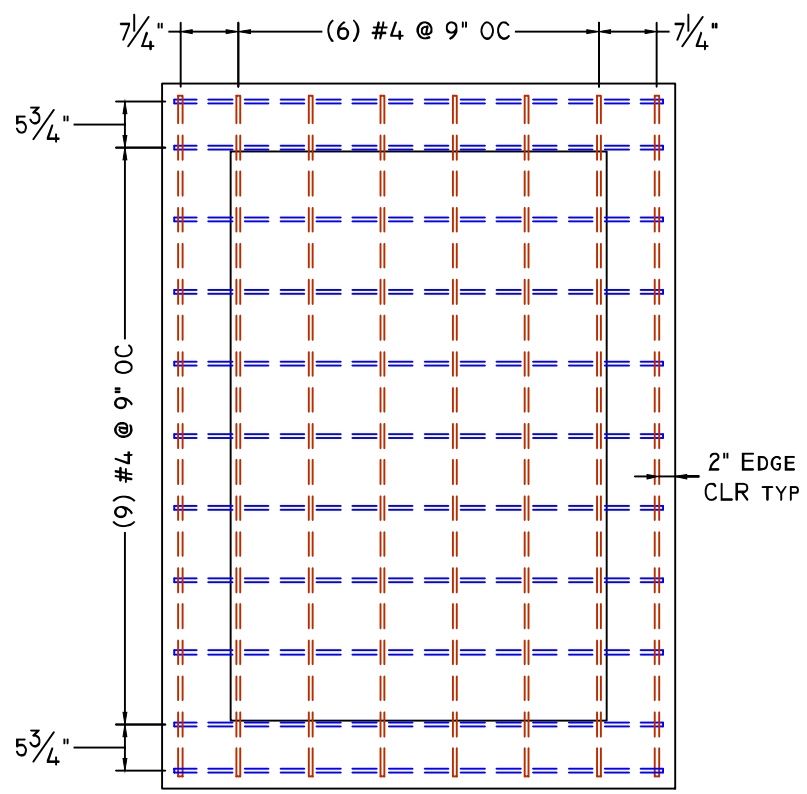

Plan View

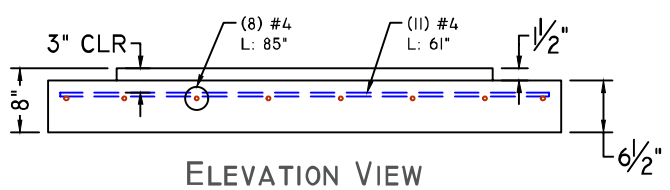

Elevation View

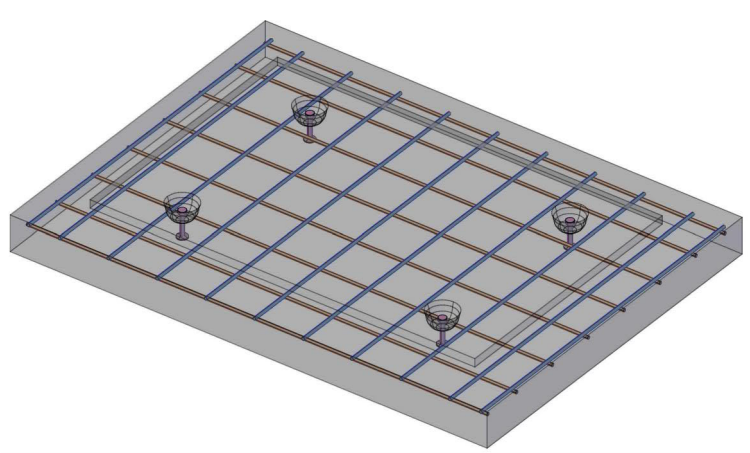

Conceptual View - NTS

Top Slab

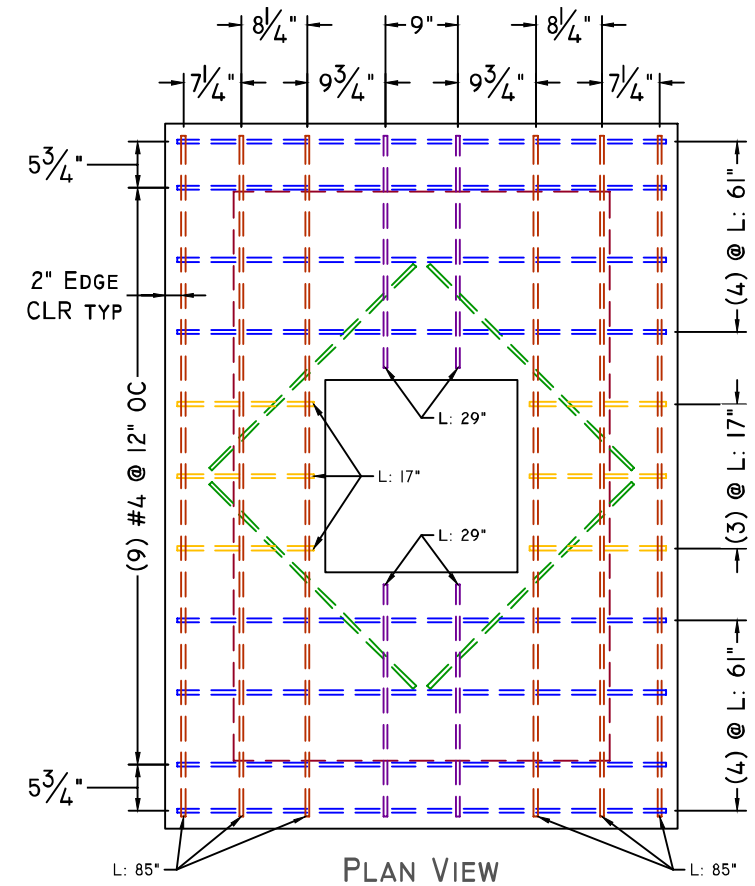

Plan View

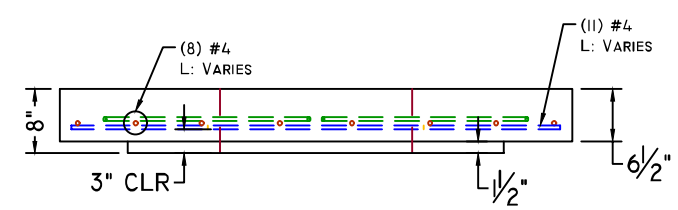

Elevation View

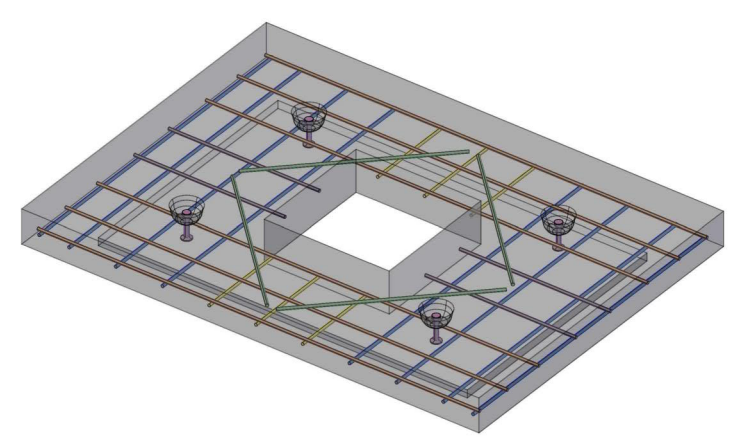

Conceptual View - NTS

American Concrete Industries
1717 Stillwater Ave. Veazie, ME. 04401
Tel: 207-947-8334
Fax: 207-947-3580
www.americanconcrete.com

ITEM	QTY	Bill Of Materials

Design Notes:

1. **Concrete**
   - 1.1. Comp. strength min. 5,000psi @ 28 days
   - 1.2. Air-Entrainment: min. 5.5%
2. **Structural Reinforcement:**
   - 2.1. Bar per ASTM A615, Grade 60
   - 2.2. Integrate rebar with lifting insert(s)
   - 2.3. Interrupted bar areas will be replaced each side with half the affected area
   - 2.4. Designed for HL-93 wheel load rating
   - 2.5. 2" CLR Exterior, 1 1/2" CLR Interior
3. **Manufacturing / Installation:**
   - 3.1. Joints sealed with butyl rubber sealant (Joint growth of 1/2"± is expected per joint)
   - 3.2. All frame & grates / covers are to be supplied & installed by others; Shown for illustrative purposes only

Note: Some details not shown for clarity
SCALE: 1/2" = 1'-0" Unless otherwise noted

Structure name: 4' x 3' x 62' Box Culvert

Job name: Bar Harbor, Rte. 3

Location: Bar Harbor, ME. (WIN: 19197.00)

Contractor: Sargent Corp.

Drawn by:	Date:	
SSM	01/16/2017	C1.5.1
Rev.#: 0.00	Date: 01/16/2017	

Barrel

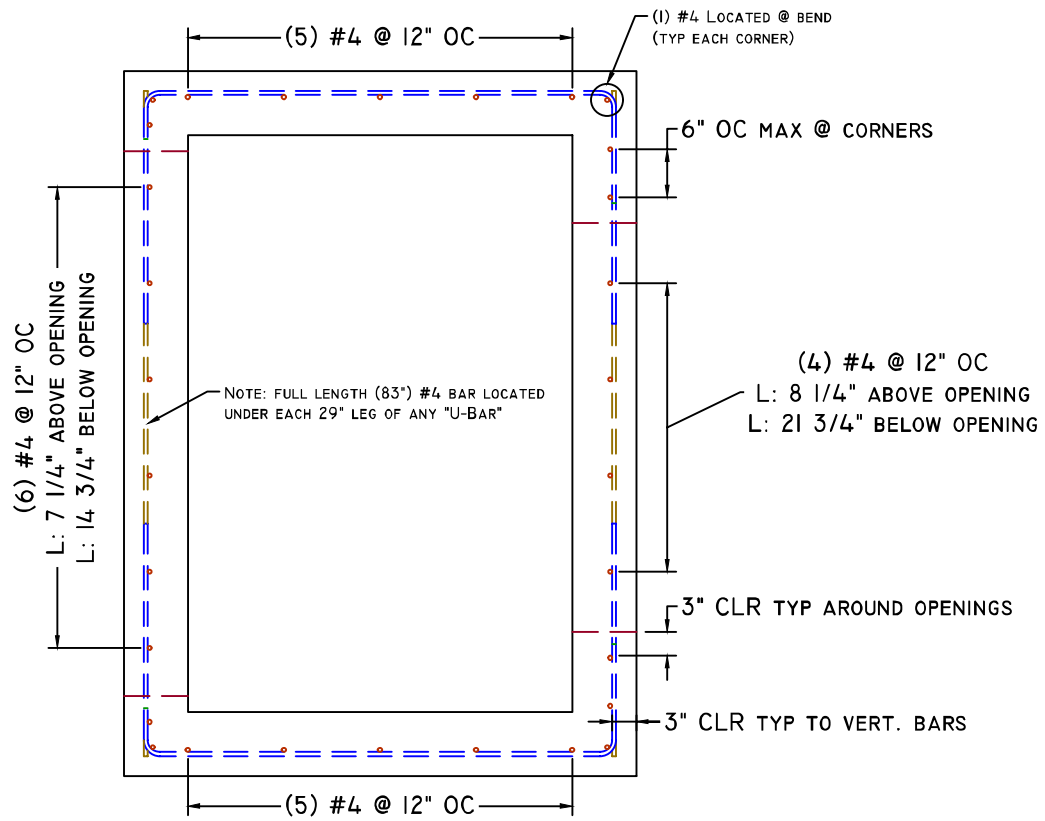

Plan View

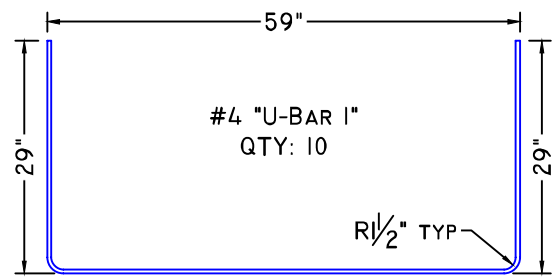

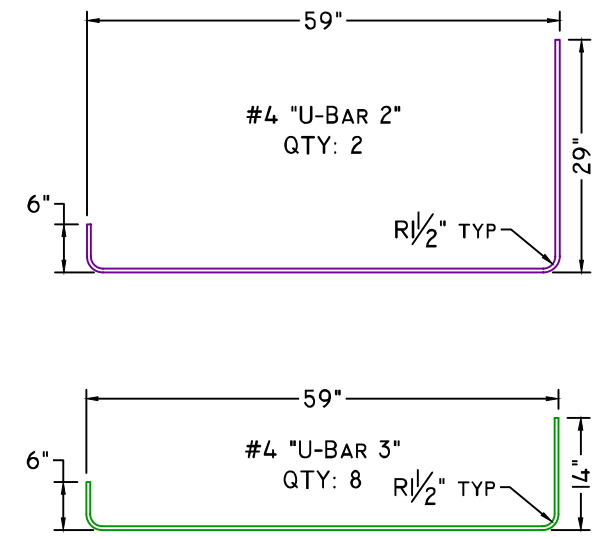

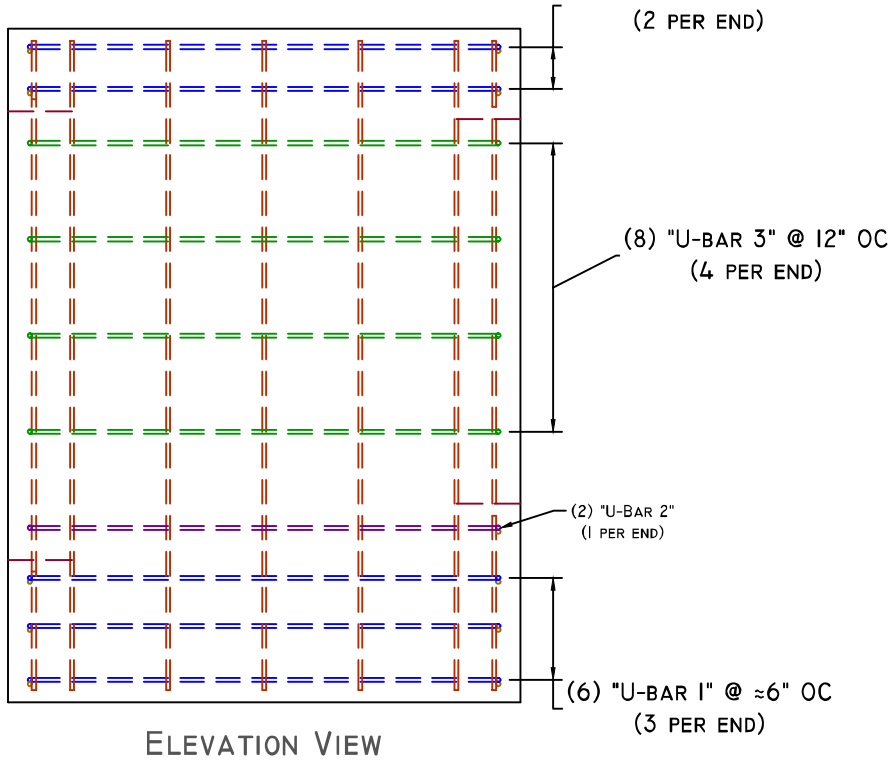

Elevation View

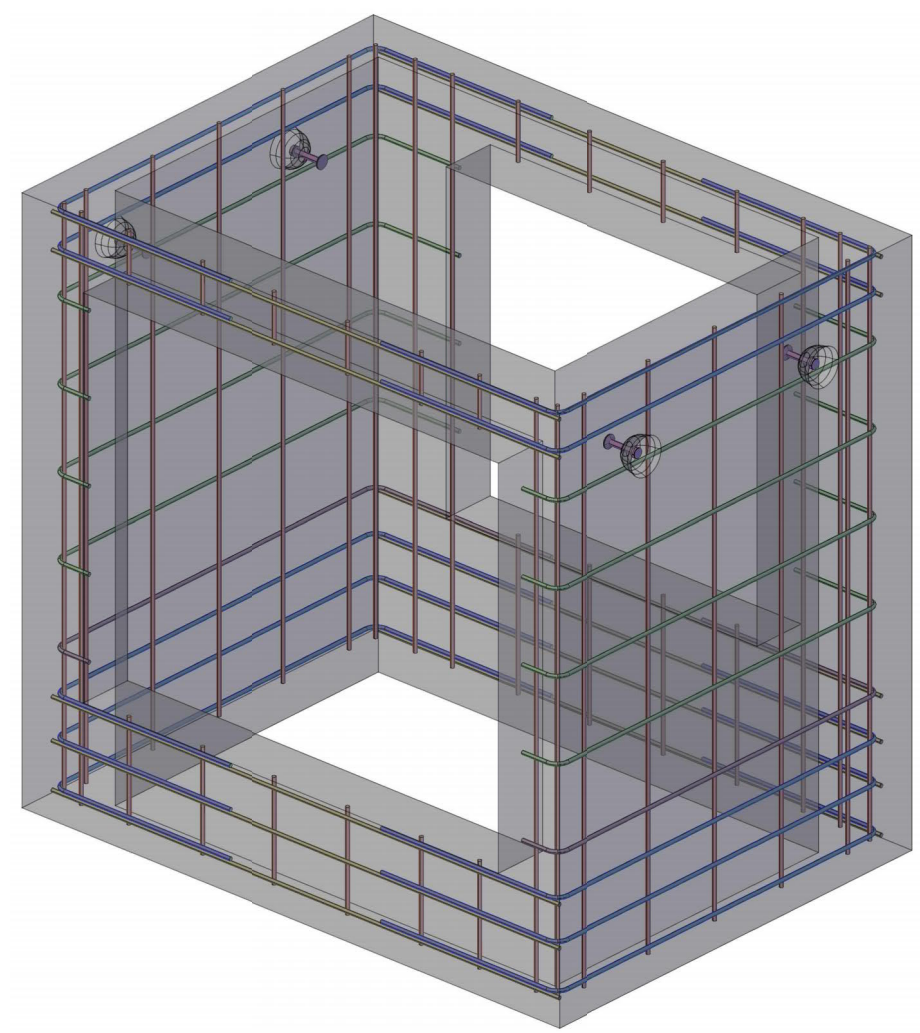

Conceptual View - NTS

American Concrete Industries
1717 Stillwater Ave. Veazie, ME. 04401
Tel: 207-947-8334
Fax: 207-947-3580
www.americanconcrete.com

Item	Qty	Bill Of Materials

Design Notes:

1. Concrete
   - 1.1. Comp. strength min. 5,000psi @ 28 days
   - 1.2. Air-Entrainment: min. 5.5%
2. Structural Reinforcement:
   - 2.1. Bar per ASTM A615, Grade 60
   - 2.2. Integrate rebar with lifting insert(s)
   - 2.3. Interrupted bar areas will be replaced each side with half the affected area
   - 2.4. Designed for HL-93 wheel load rating
   - 2.5. 2" CLR Exterior, 1 1/2" CLR Interior
3. Manufacturing / Installation:
   - 3.1. Joints sealed with butyl rubber sealant (Joint growth of 1/2"± is expected per joint)
   - 3.2. All frame & grates / covers are to be supplied & installed by others; Shown for illustrative purposes only

Note: Some details not shown for clarity
SCALE: 1/2" = 1'-0" Unless otherwise noted

Structure name:	4' x 3' x 62' Box Culvert
Job name:	Bar Harbor, Rte. 3
Location:	Bar Harbor, ME. (WIN: 19197.00)
Contractor:	Sargent Corp.

Drawn by:	Date:	
SSM	01/05/2017	C1.5.2
Rev.#: 0.00	Date: 01/05/2017	

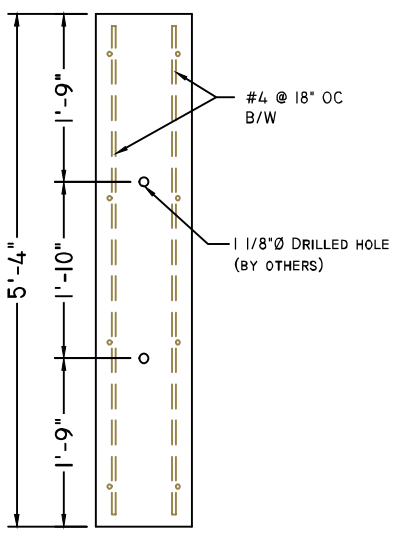

TOEWALL PLAN VIEW

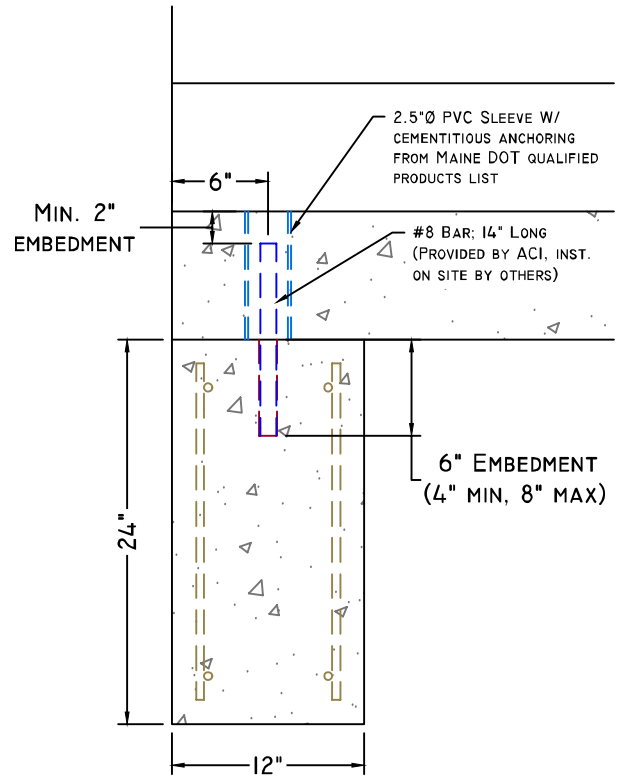

TOEWALL ELEVATION VIEW

SCALE: 1" = 1'-0"

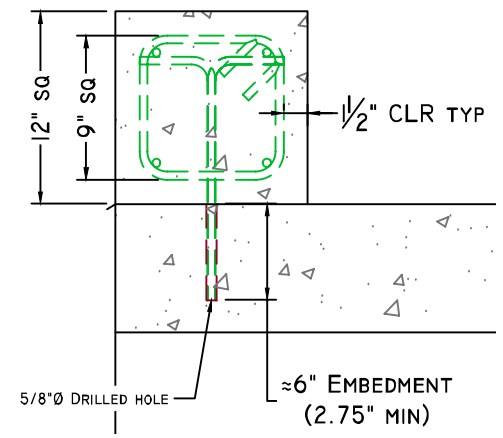

TYPICAL HEADWALL REINFORCING

SCALE: 1" = 1'-0"

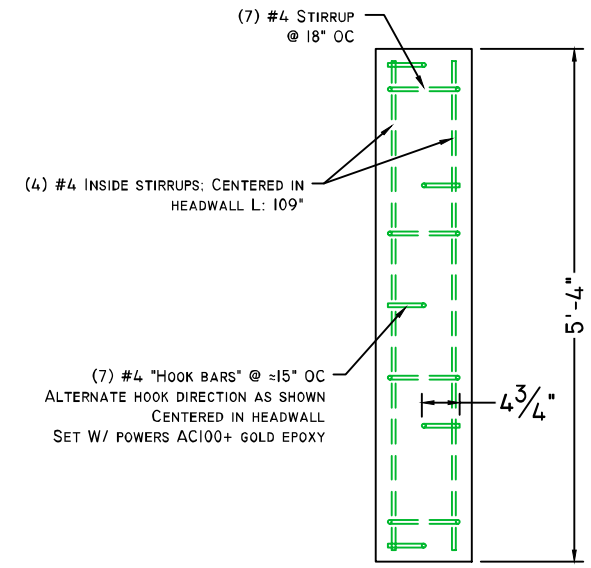

HEADWALL PLAN VIEW

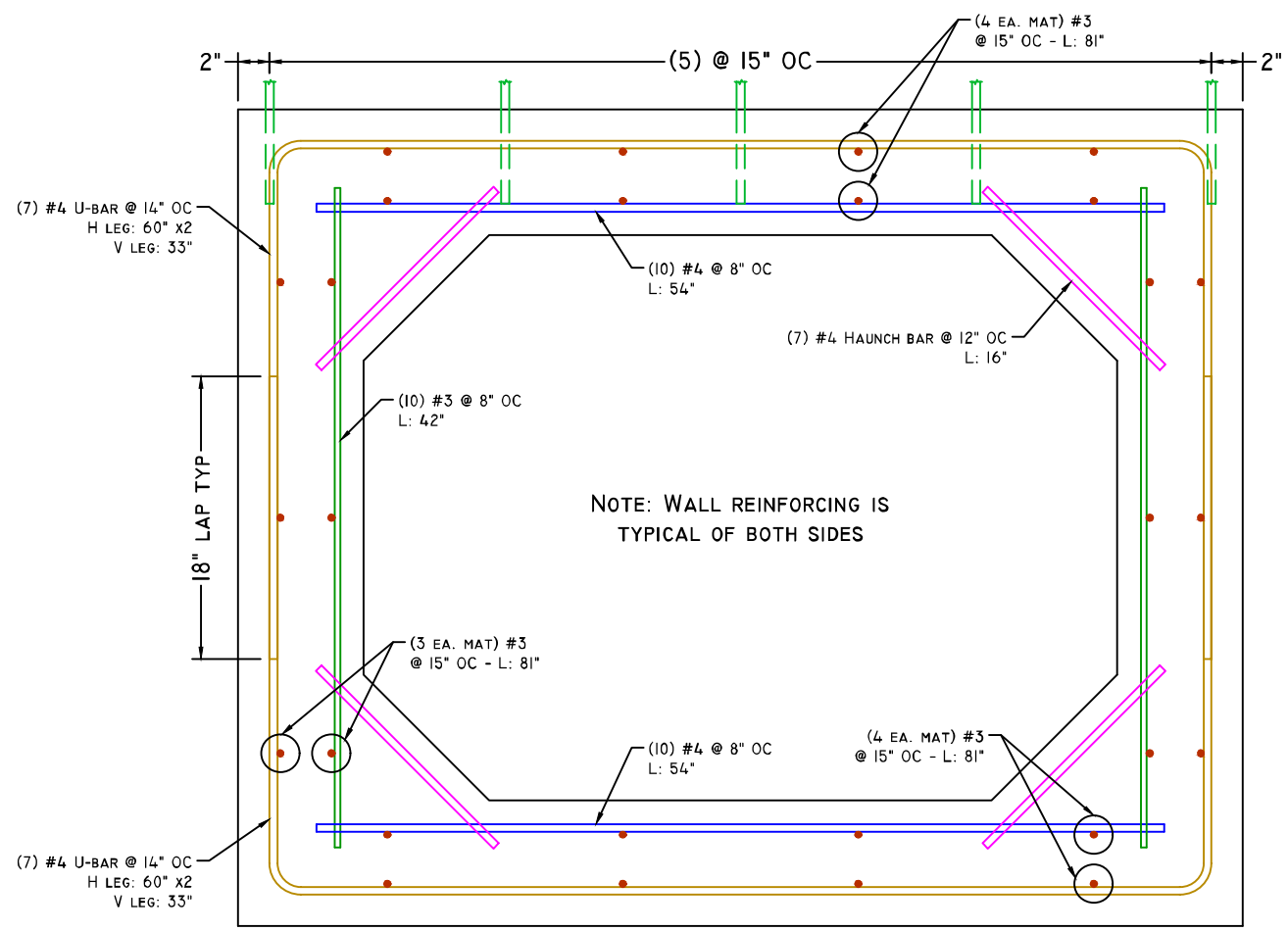

TYPICAL CULVERT REINFORCING

SCALE: 1" = 1'-0"

American Concrete Industries
1717 Stillwater Ave. Veazie, ME. 04401
Tel: 207-947-8334
Fax: 207-947-3580
www.americanconcrete.com

ITEM	QTY	BILL OF MATERIALS

DESIGN NOTES:

1. **Concrete**
   - 1.1. Comp. strength min. 5,000psi @ 28 days
   - 1.2. Air-Entrainment: min. 5.5%
2. **Structural Reinforcement:**
   - 2.1. Bar per ASTM A615, Grade 60
   - 2.2. Integrate rebar with lifting insert(s)
   - 2.3. Interrupted bar areas will be replaced each side with half the affected area
   - 2.4. Designed for HL-93 wheel load rating
   - 2.5. 2" CLR Exterior, 1 1/2" CLR Interior
3. **Manufacturing / Installation:**
   - 3.1. Joints sealed with butyl rubber sealant (Joint growth of 1/2"± is expected per joint)
   - 3.2. All frame & grates / covers are to be supplied & installed by others; Shown for illustrative purposes only

Note: Some details not shown for clarity
SCALE: 1/2" = 1'-0" Unless otherwise noted

STRUCTURE NAME: 4' x 3' x 62' Box Culvert		
JOB NAME: Bar Harbor, Rte. 3		
LOCATION: Bar Harbor, ME. (WIN: 19197.00)		
CONTRACTOR: Sargent Corp.		
DRAWN BY: SSM	DATE: 01/16/2017	D1.0
REV.#: 0.00	DATE: 01/16/2017	

American Concrete Industries

48" x 24" Utility Trench

ACI Catalog 2013	
Utilities Trenches	Item#

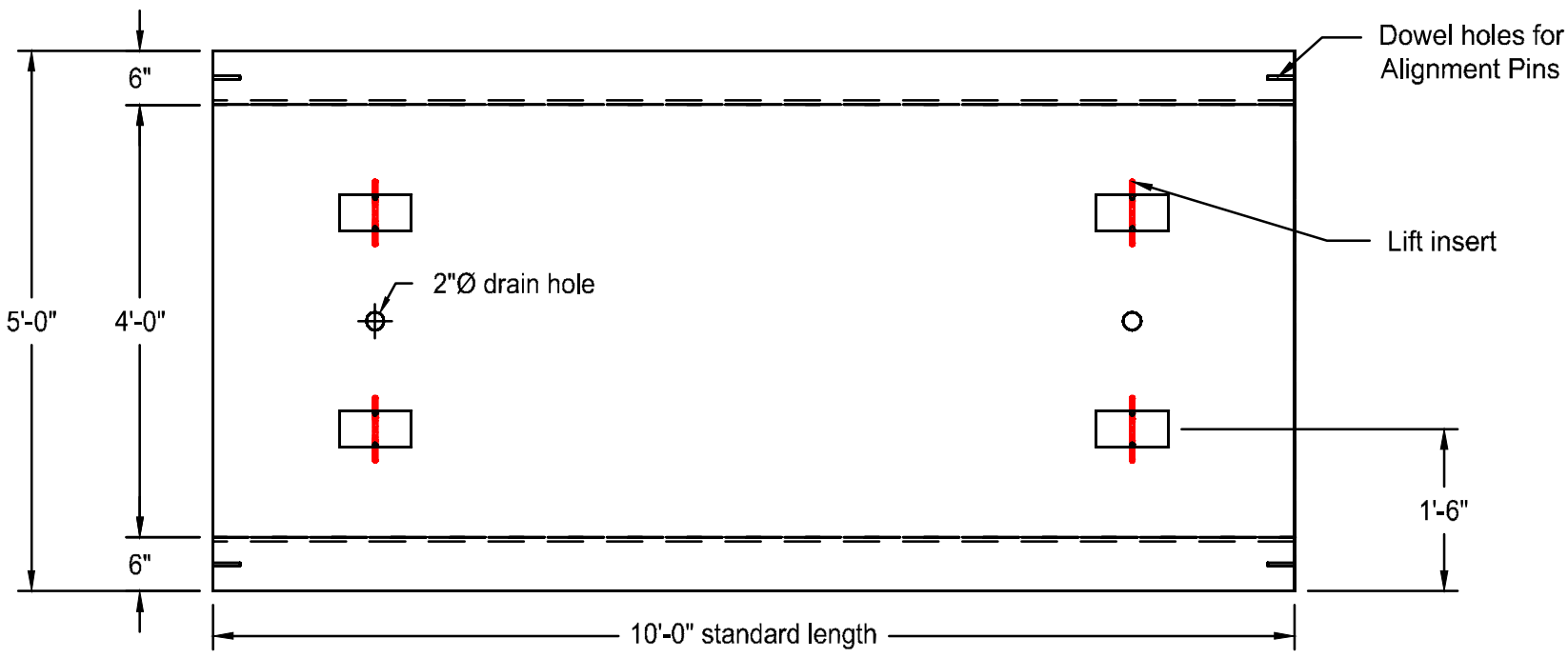

Plan View

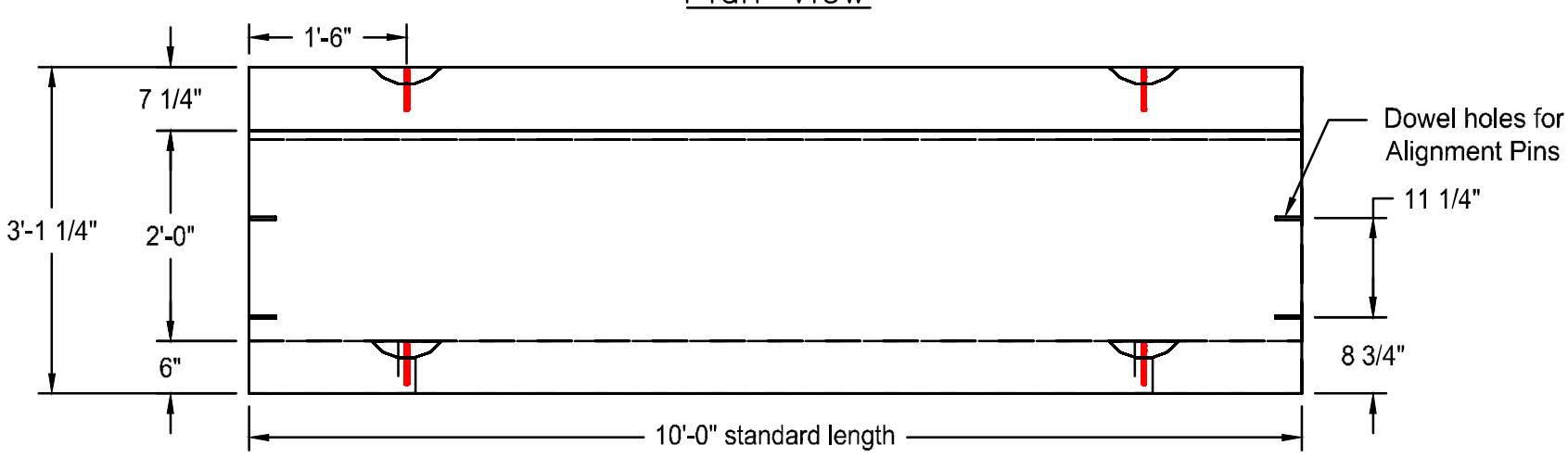

Elevation View

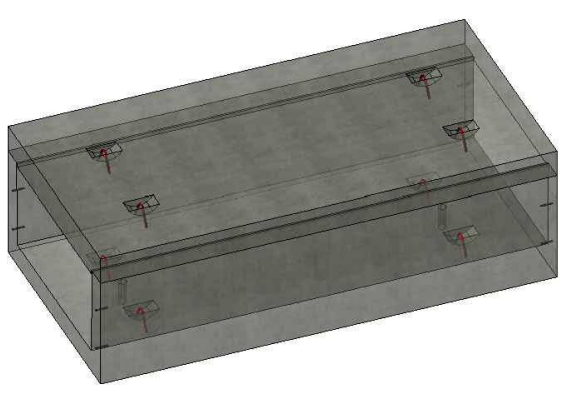

Conceptual View

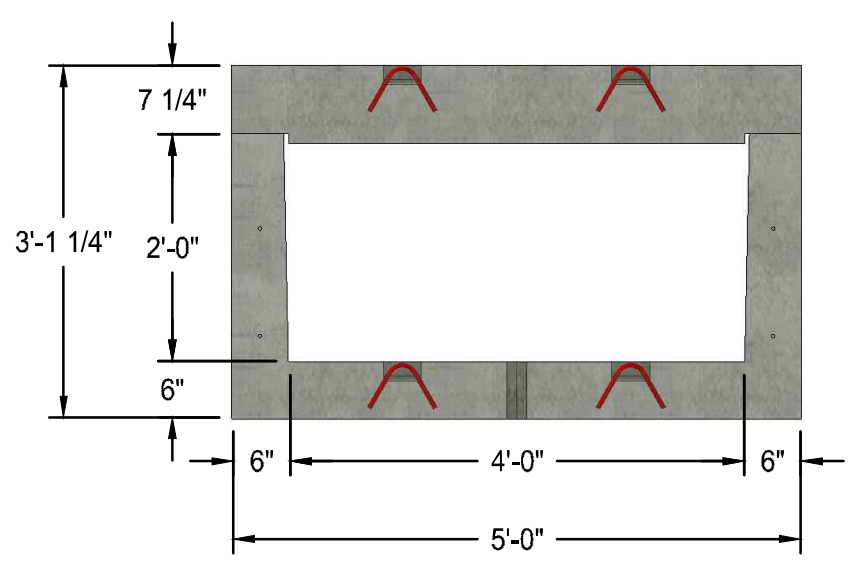

End View

Notes:

1) Concrete shall be 5,000 psi at 28 days, with 4-6% air
2) Reinforced for H-20 loading, Grade 60 steel
3) 4" & 2" duct knockouts & drain openings available, see sheet #V-D3 & V-D4
4) Special lengths, angled or tee sections available
5) End walls available, see sheet #V-D1
6) Maximum trench height shown, shorter heights available
7) Cover weight ≈ 5,000#, Trench weight ≈ 6,600#

www.americanconcrete.com
1717 Stillwater Ave.
Veazie, ME 04401
Tel: (207) 947-8334 | Fax: (207) 947-3580

1022 Minot Ave
Auburn, ME 04210
Tel: (207) 784-1388 | Fax: (207) 783-4039

Scale: 1/2" = 1'-0" Unless otherwise noted	Revision #:
Drawn Date: 7/22/2013 BRW	Revision Date:

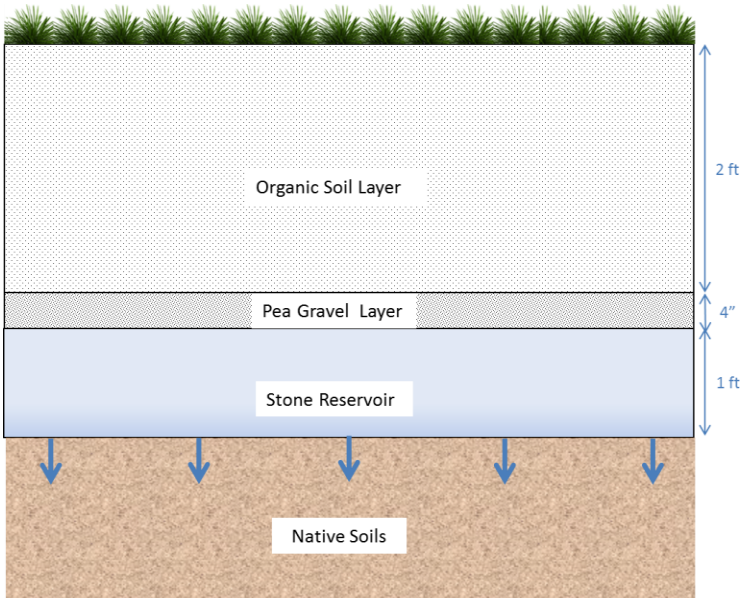

Bioretention Conceptual Profile

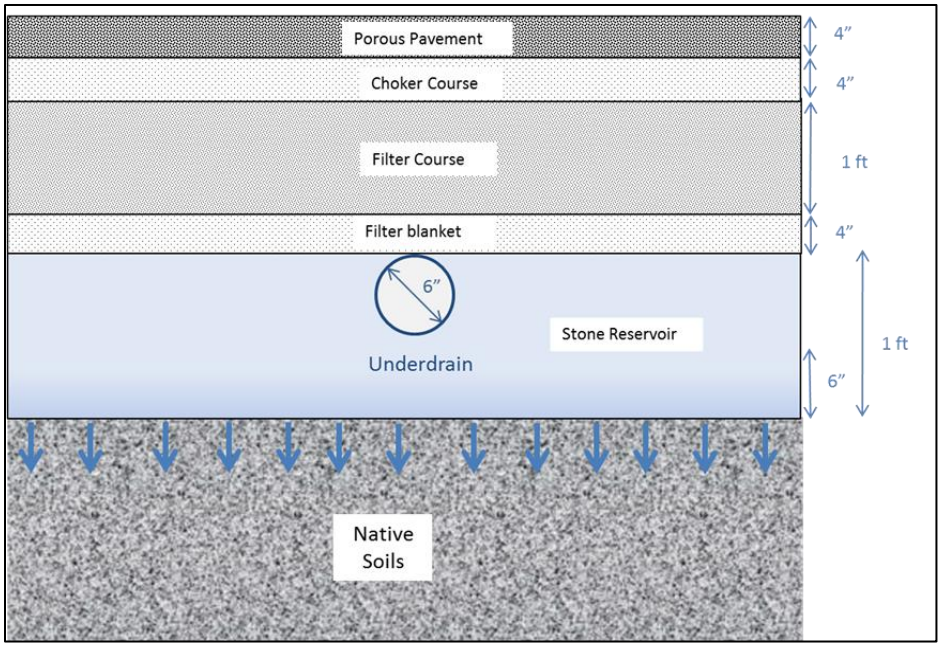

Porous Pavement Conceptual Profile

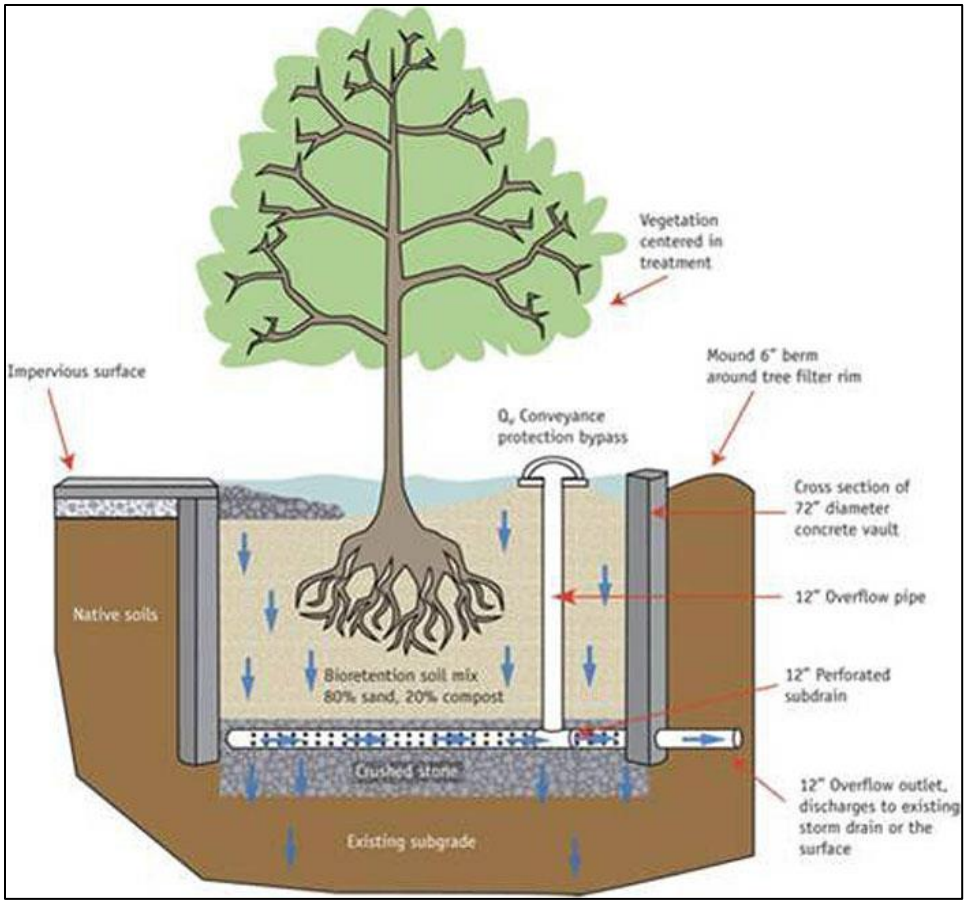

Treebox Filter Conceptual Profile